Published: 11-May-2011

Air Conditioning - V8 5.0L Petrol -

Lubricant

Item	Specification
Air conditioning (A/C) compressor oil type	Sanden SP-10 PAG oil
A/C compressor oil - vehicles fitted with 2 zone	110 cm³
A/C compressor oil - vehicles fitted with 4 zone	160 cm³

Refrigerant

Item	Specification
Refrigerant type	R134A
Refrigerant - vehicles fitted with 2 zone - vehicles with 3.0 diesel	600 grammes
Refrigerant - vehicles fitted with 2 zone - vehicles with 5.0L	650 grammes
Refrigerant - vehicles fitted with 4 zone	900 grammes

Torque Specifications

Description	Nm	lb-ft	lb-in
A/C compressor bolts	25	18	-
A/C discharge line to compressor bolt	18	13	-
A/C suction line to compressor bolt	18	13	-
A/C suction line bracket bolts	6	-	53
A/C discharge line to condenser bolt	6	-	53
A/C liquid line to condenser bolt	6	-	53
A/C condenser manifold to radiator bolt	10	7	-
Condenser to radiator bolt - vehicles with 5.0L	10	7	-
Condenser to radiator bolt - vehicles with 3.0 diesel	5	-	44
Evaporator line to evaporator core bolt	6	-	53
Evaporator line bracket nut	6	-	53
A/C liquid line to front evaporator line bolt - vehicles fitted with 4 zone	18	13	-
A/C suction line to front evaporator line bolt - vehicles fitted with 4 zone	18	13	-
A/C lines to rear evaporator bolts - vehicles fitted with 4 zone	9	-	80
A/C pressure transducer	10	7	-
Thermostatic expansion valve (TXV) to refrigerant line clamp bolts	5	-	44

mcx30.com

Air Conditioning - V8 5.0L Petrol - Air Conditioning

Description and Operation

COMPONENT LOCATION 2.7L TdV6

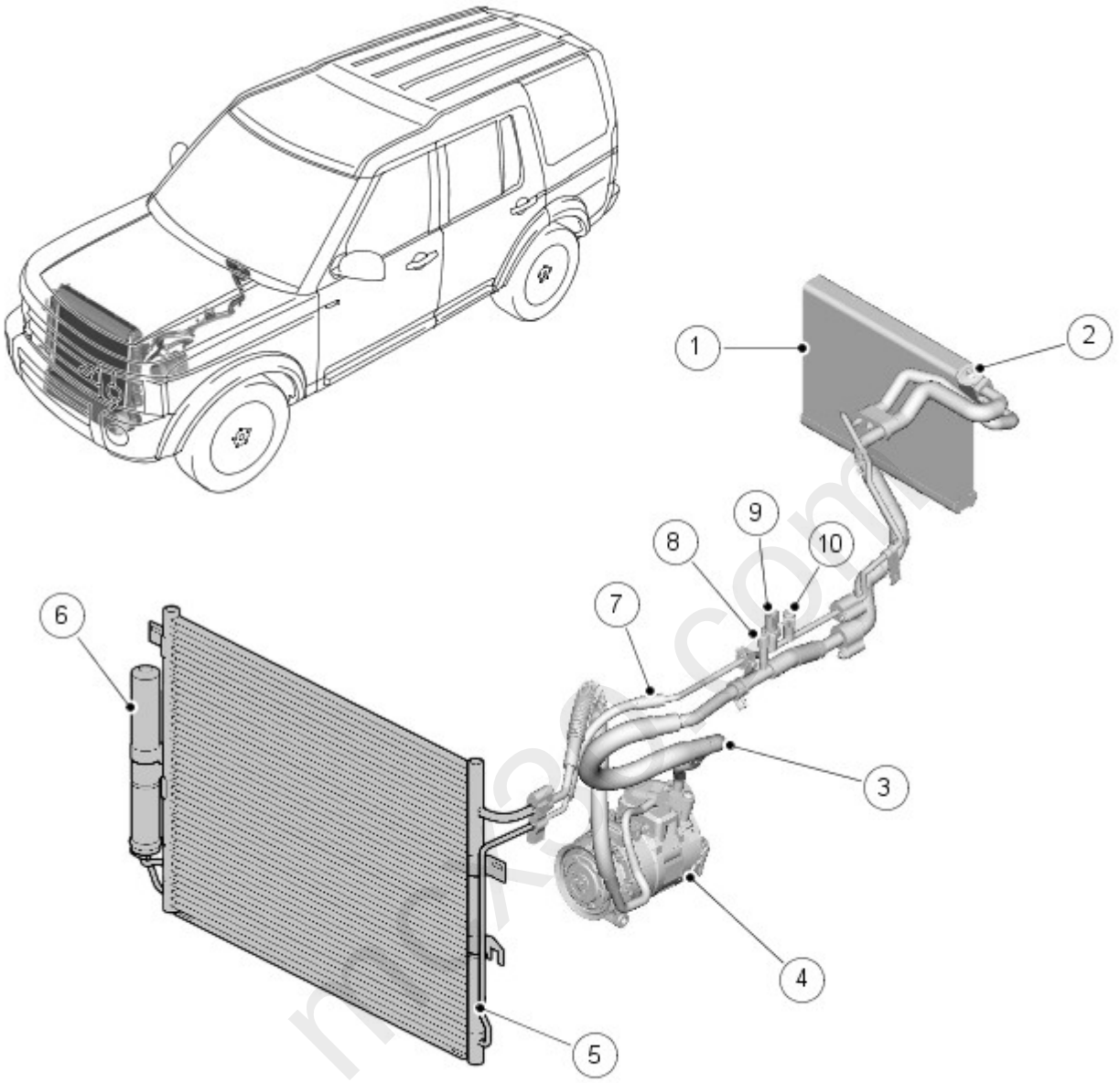

E131578

Item	Part Number	Description
1	-	Evaporator
2	-	Thermostatic expansion valve
3	-	Low pressure line
4	-	air conditioning (A/C) compressor
5	-	Condenser
6	-	Receiver drier
7	-	High pressure line
8	-	Low pressure servicing connection
9	-	Refrigerant pressure sensor (reference)
10	-	High pressure servicing connection

COMPONENT LOCATION 3.0L TdV6

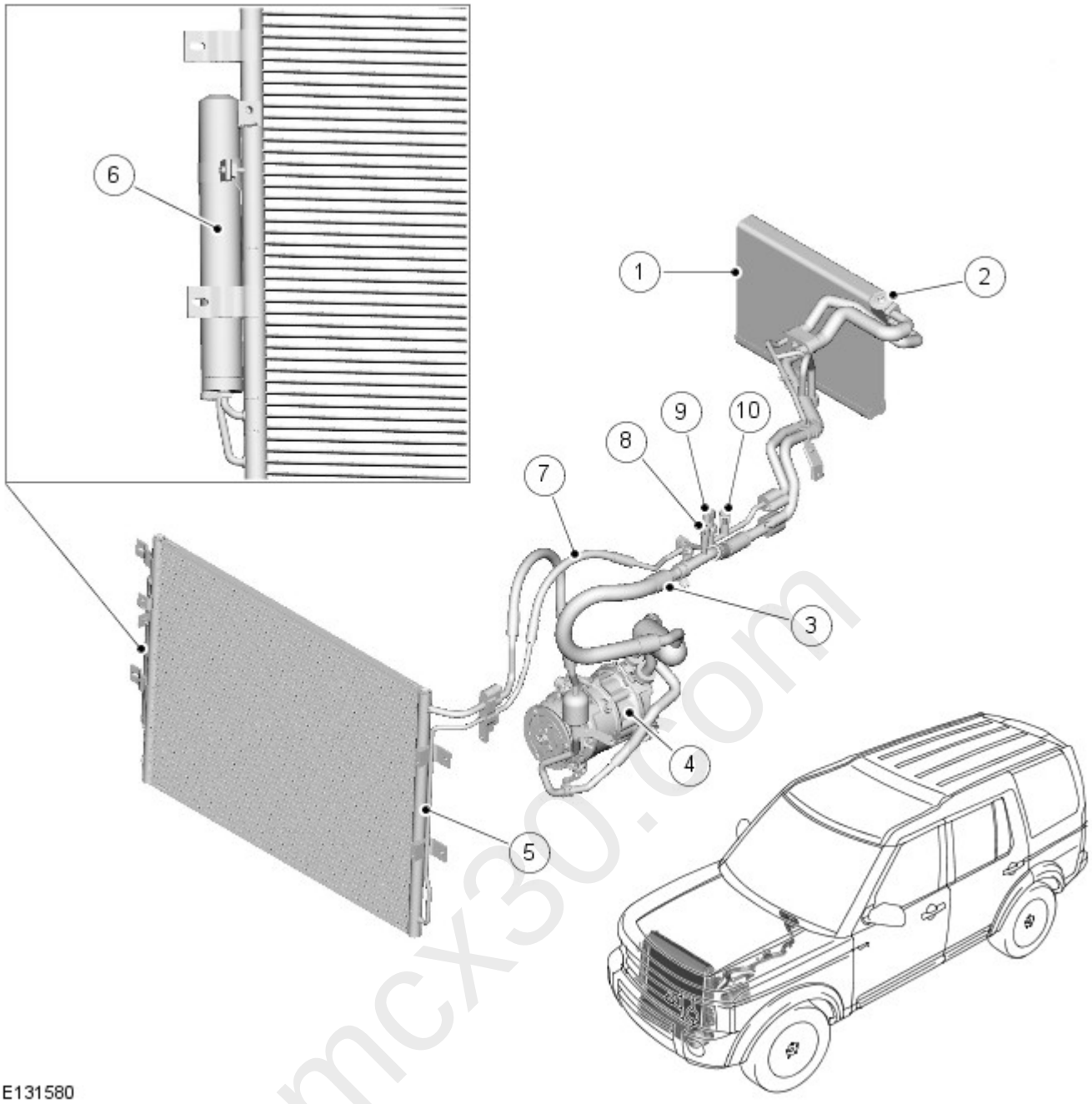

Item	Part Number	Description
1	-	Evaporator
2	-	Thermostatic expansion valve
3	-	Low pressure line
4	-	A/C compressor
5	-	Condenser
6	-	Receiver drier
7	-	High pressure line
8	-	Low pressure servicing connection
9	-	Refrigerant pressure sensor (reference)
10	-	High pressure servicing connection

COMPONENT LOCATION 4.0L NA V6

mcx30.com

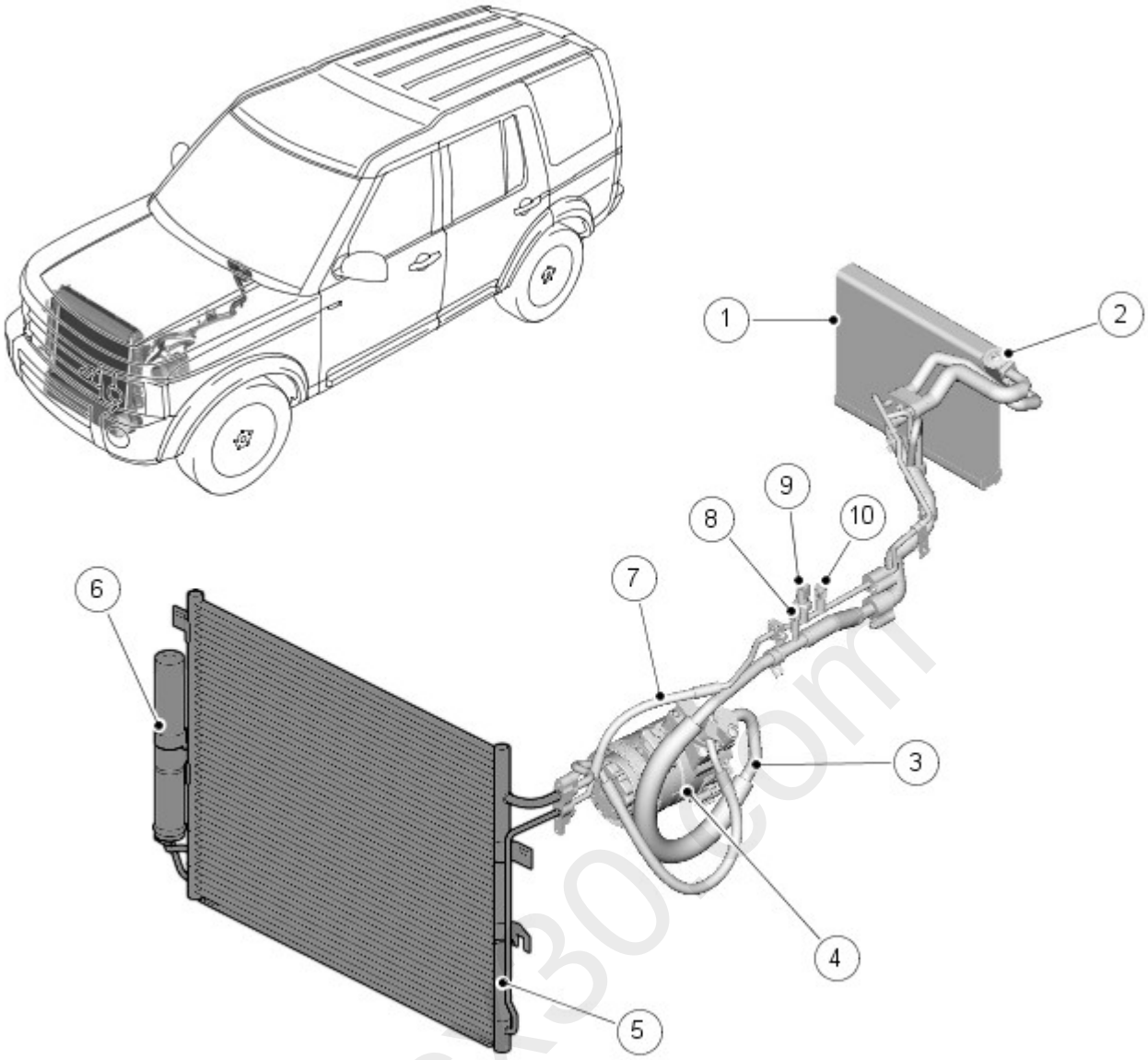

E131582

Item	Part Number	Description
1	-	Evaporator
2	-	Thermostatic expansion valve
3	-	Low pressure line
4	-	A/C compressor
5	-	Condenser
6	-	Receiver drier
7	-	High pressure line
8	-	Low pressure servicing connection
9	-	Refrigerant pressure sensor (reference)
10	-	High pressure servicing connection

COMPONENT LOCATION 5.0L NA V8

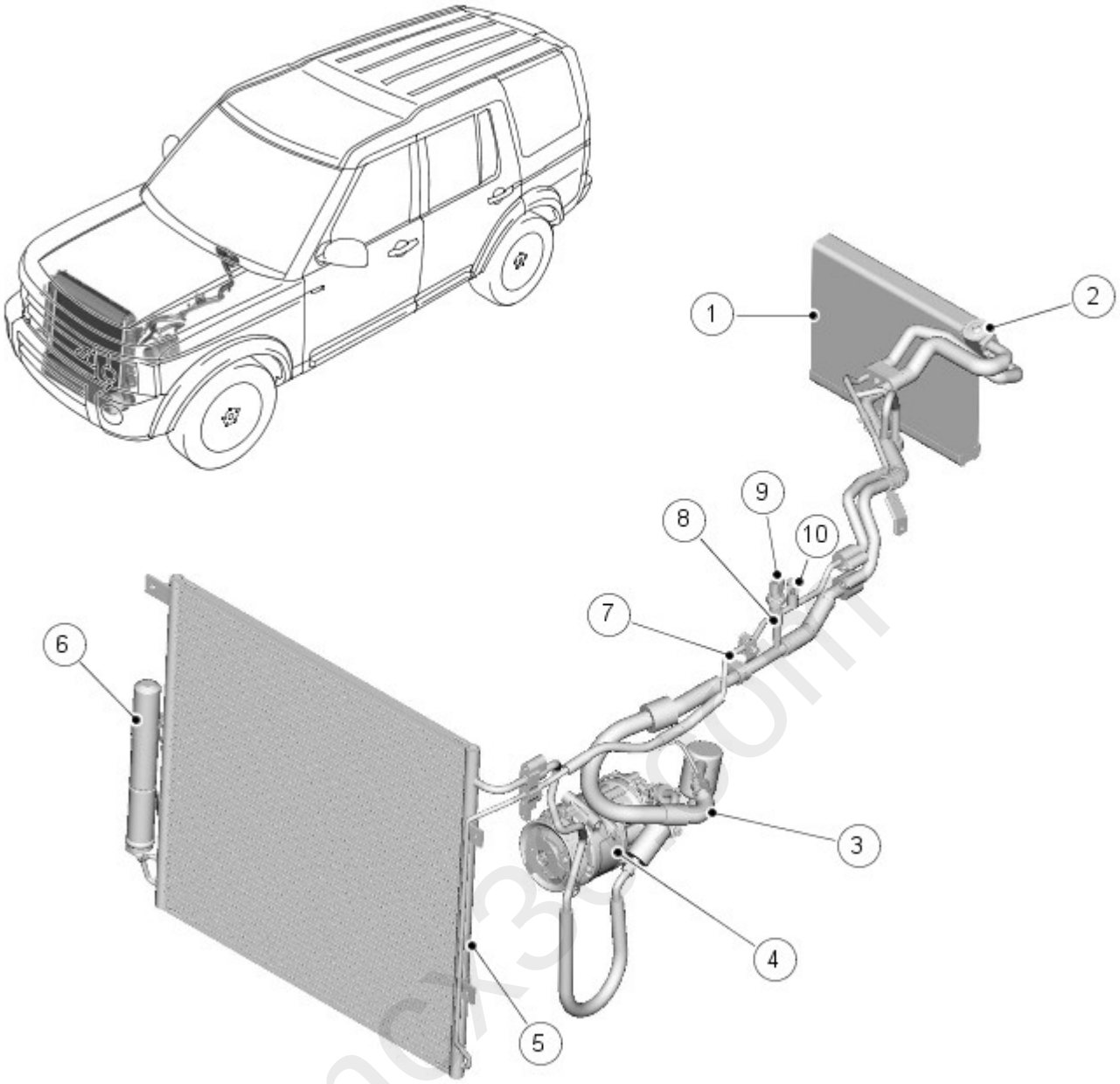

E131583

Item	Part Number	Description
1	-	Evaporator
2	-	Thermostatic expansion valve
3	-	Low pressure line
4	-	A/C compressor
5	-	Condenser
6	-	Receiver drier
7	-	High pressure line
8	-	Low pressure servicing connection
9	-	Refrigerant pressure sensor (reference)
10	-	High pressure servicing connection

GENERAL

The A/C system transfers heat from the vehicle interior to the outside atmosphere to provide the heater assembly with dehumidified cool air. The system consists of:

- A compressor.
- A condenser.
- A receiver drier.
- A thermostatic expansion valve.
- An evaporator.
- Low and high pressure refrigerant lines.

The system is a sealed, closed loop, filled with a charge weight of R134a refrigerant as the heat transfer medium. Oil is added to the refrigerant to lubricate the internal components of the compressor.

Operation of the air conditioning system is controlled by the automatic temperature control (ATC) module. The A/C compressor circulates the refrigerant around the system by compressing low pressure, low temperature vapor from the evaporator and discharging the resultant high pressure, high temperature vapor to the condenser.

The A/C compressor is a variable displacement unit which is driven by the engine accessory drive belt. On 2.7L/4.0L and 5.0L vehicles, the A/C (air conditioning) compressor is permanently driven directly from the pulley. On 3.0L diesel vehicles the A/C compressor is driven via an electro-magnetic clutch.

To protect the refrigerant system from excessive pressure, a pressure relief valve is installed in the outlet side of the A/C compressor. The pressure relief valve vents excess pressure into the engine compartment.

For additional information, refer to: Control Components (412-04, Description and Operation).

A / C COMPRESSOR

2.7L TdV6

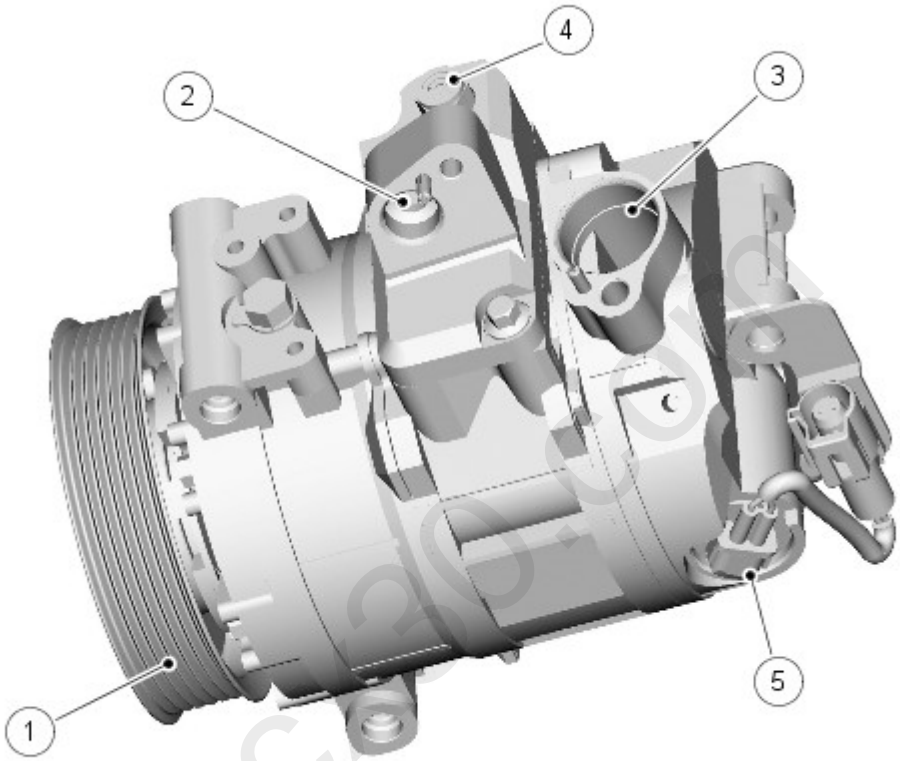

E131577

Item	Part Number	Description
1	-	Pulley
2	-	Outlet port
3	-	Inlet port
4	-	Pressure relief valve
5	-	Electronic control valve connector

The A/C compressor fitted to 2.7L TdV6 petrol vehicles is a variable displacement unit. The secondary accessory drive belt, driven by the engine crankshaft, drives the A/C compressor via a pulley. Operation of the compressor is controlled by an electronic control valve working in conjunction with the ATC (automatic temperature control) module.

The A/C compressor is a 7 cylinder swash plate unit with a minimum displacement of 1.6 cm^3/rev (0.10 in^3/rev) and maximum displacement of 171 cm^3/rev (10.43 in^3/rev). The ATC module automatically adjusts the displacement of the A/C compressor between the minimum and maximum values, to match the thermal load of the evaporator. By matching refrigerant flow and the thermal load of the evaporator, the ATC module maintains cabin comfort whilst also considering fuel economy.

To protect the refrigerant system from unacceptably high pressure, a pressure relief valve is installed in the outlet side of the A/C compressor. The pressure relief valve is set to open at 3.5 to 4.3 MPa (508 to 623lbf/in^2) and vents excess pressure into the engine compartment. The pressure relief valve closes again when the pressure decreases to 3.01 MPa (436 lbf/in^2).

The pulley of the A/C compressor incorporates a mechanical torque limiter, which disconnects the drive plate from the compressor shaft if torque increases to a level that indicates imminent compressor seizure.

3.0L TdV6

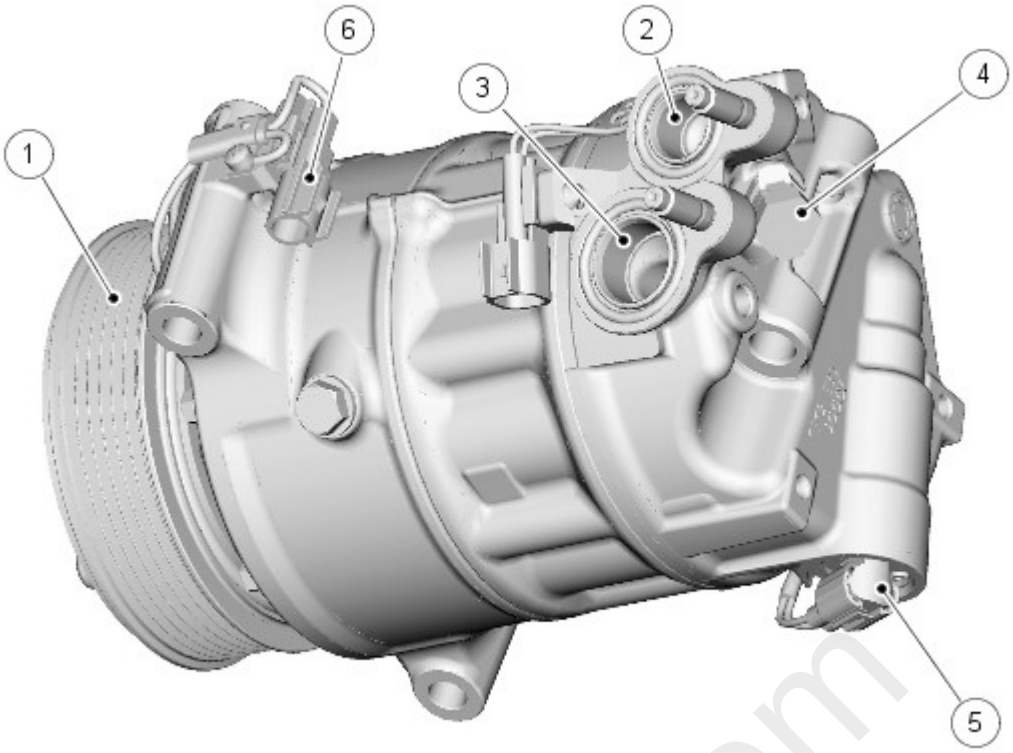

E131579

Item	Part Number	Description
1	-	Pulley
2	-	Outlet port
3	-	Inlet port
4	-	Pressure relief valve
5	-	Electronic control valve connector
6	-	electromagnetic clutch connector

The A/C compressor fitted to 3.0L TdV6 diesel vehicles is a variable displacement unit. The secondary accessory drive belt, driven by the engine crankshaft, drives the A/C compressor via a pulley and an electromagnetic clutch. Operation of the clutch is controlled by a power feed from the ATC module.

The A/C compressor is a 7 cylinder swash plate unit with a minimum displacement of 1.6 cm^3/rev (0.10 in^3/rev) and maximum displacement of 163 cm^3/rev (9.95 in^3/rev). The ATC module automatically adjusts the displacement of the A/C compressor between the minimum and maximum values, to match the thermal load of the evaporator. By matching refrigerant flow and the thermal load of the evaporator, the ATC module maintains cabin comfort whilst also considering fuel economy.

To protect the refrigerant system from unacceptably high pressure, a pressure relief valve is installed in the outlet side of the A/C compressor. The pressure relief valve is set to open at 3.5 to 4.1 MPa (508 to 595 lbf/in^2) and vents excess pressure into the engine compartment. The pressure relief valve closes again when the pressure decreases to 3.1 MPa (449 lbf/in^2).

The clutch of the A/C compressor incorporates a thermal cut-off fuse, which disconnects the power feed from the ATC module if the temperature increases to 182 ± 5 ^{o}C (360 ± 9 ^{o}F).

4.0L NA V6

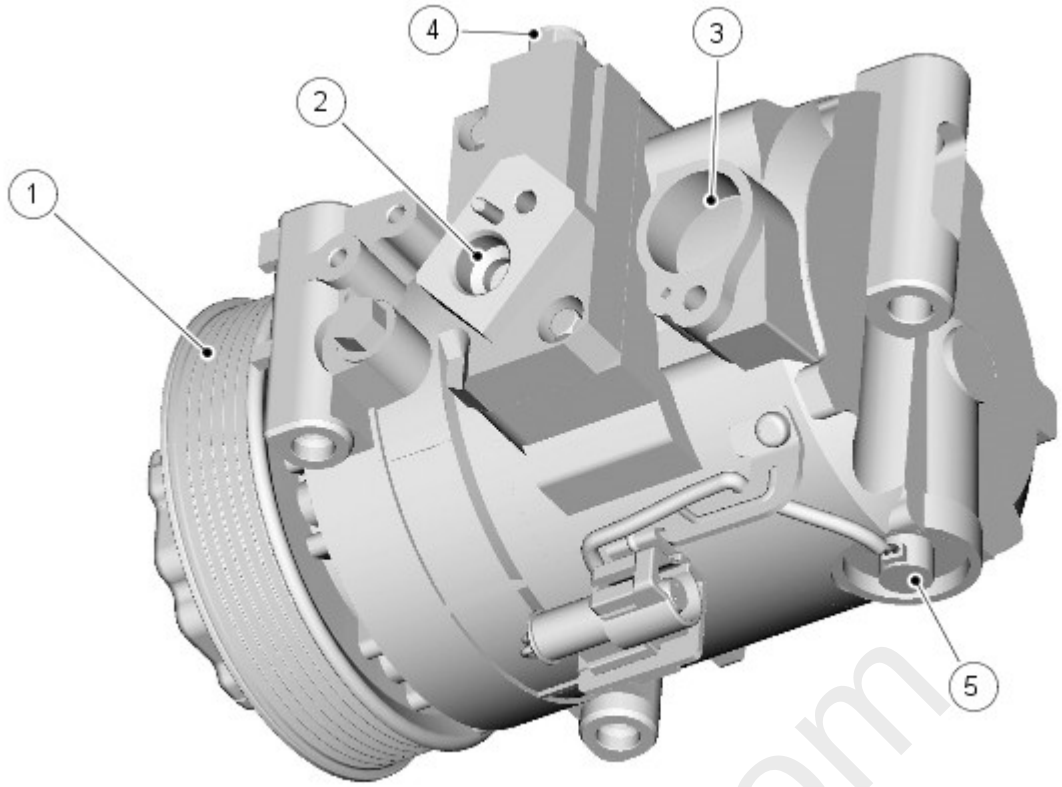

E131581

Item	Part Number	Description
1	-	Pulley
2	-	Outlet port
3	-	Inlet port
4	-	Pressure relief valve
5	-	Electronic control valve connector

The A/C compressor fitted to 4.0L NA V6 petrol vehicles is a variable displacement unit. The secondary accessory drive belt, driven by the engine crankshaft, drives the A/C compressor via a pulley. Operation of the compressor is controlled by an electronic control valve working in conjunction with the ATC module.

The A/C compressor is a 7 cylinder swash plate unit with a minimum displacement of 1.6 cm^3/rev (0.10 in^3/rev) and maximum displacement of 171 cm^3/rev (10.43 in^3/rev). The ATC module automatically adjusts the displacement of the A/C compressor between the minimum and maximum values, to match the thermal load of the evaporator. By matching refrigerant flow and the thermal load of the evaporator, the ATC module maintains cabin comfort whilst also considering fuel economy.

To protect the refrigerant system from unacceptably high pressure, a pressure relief valve is installed in the outlet side of the A/C compressor. The pressure relief valve is set to open at 3.5 to 4.3 MPa (508 to 623lbf/in^2) and vents excess pressure into the engine compartment. The pressure relief valve closes again when the pressure decreases to 3.01 MPa (437 lbf/in^2).

The pulley of the A/C compressor incorporates a mechanical torque limiter, which disconnects the drive plate from the compressor shaft if torque increases to a level that indicates imminent compressor seizure.

5.0L NA V8

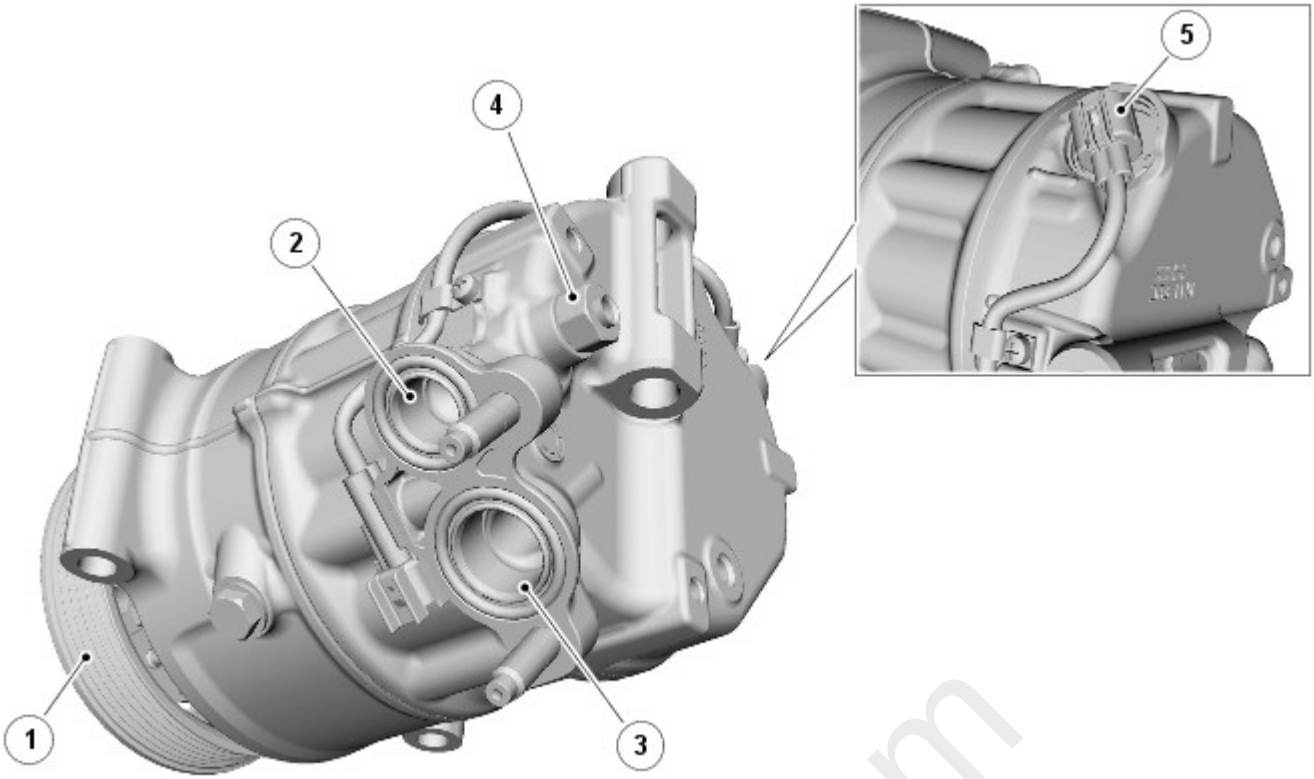

E131337

Item	Part Number	Description
1	-	Pulley
2	-	Outlet port
3	-	Inlet port
4	-	Pressure relief valve
5	-	Electronic control valve connector

The A/C compressor fitted to 5.0L V8 petrol vehicles is a variable displacement unit. The secondary accessory drive belt, driven by the engine crankshaft, drives the A/C compressor via a pulley. Operation of the compressor is controlled by an electronic control valve working in conjunction with the ATC module.

The A/C compressor is a 7 cylinder swash plate unit with a minimum displacement of 1.6 cm^3/rev (0.10 in^3/rev) and maximum displacement of 163 cm^3/rev (9.95 in^3/rev). The ATC module automatically adjusts the displacement of the A/C compressor between the minimum and maximum values, to match the thermal load of the evaporator. By matching refrigerant flow and the thermal load of the evaporator, the ATC module maintains cabin comfort whilst also considering fuel economy.

To protect the refrigerant system from unacceptably high pressure, a pressure relief valve is installed in the outlet side of the A/C compressor. The pressure relief valve is set to open at 3.5 to 4.1 MPa (508 to 595 lbf/in^2) and vents excess pressure into the engine compartment. The pressure relief valve closes again when the pressure decreases to 3.1 MPa (449 lbf/in^2).

The pulley of the A/C compressor incorporates a mechanical torque limiter, which disconnects the drive plate from the compressor shaft if torque increases to a level that indicates imminent compressor seizure.

CONDENSER

- NOTE: 5.0L NA V8 version shown other installations similar

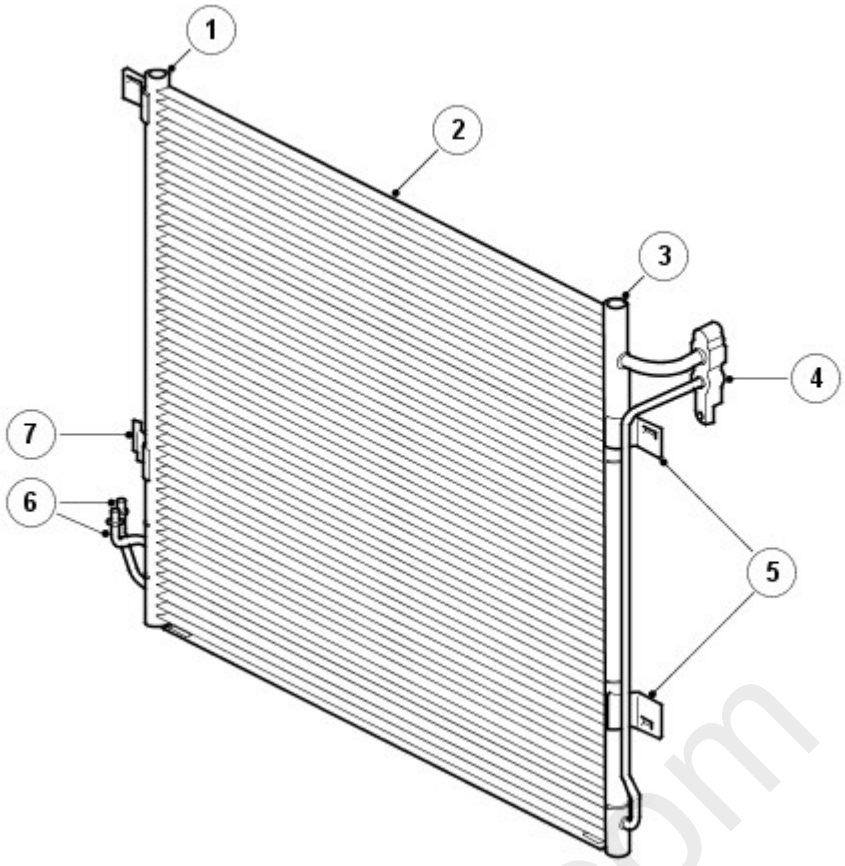

Item	Part Number	Description
1	-	right-hand (RH) end tank
2	-	Condenser core
3	-	left-hand (LH) end tank
4	-	High pressure line connector block
5	-	Condenser attachment brackets
6	-	Receiver drier pipes
7	-	Receiver drier attachment bracket

The condenser transfers heat from the refrigerant to the surrounding air to convert the high pressure vapor from the compressor into a liquid. The condenser is installed immediately in front of the radiator. Two brackets on each end tank of the condenser attach the condenser to clips on the end tanks of the radiator.

The condenser is classified as a sub-cooling condenser and consists of a fin and tube heat exchanger core installed between two end tanks. Divisions in the end tanks separate the heat exchanger into a four pass upper (condenser) section and a two pass lower (sub-cooler) section. A connector block on the left end tank of the condenser provides connections for the high pressure lines from the A/C compressor and the evaporator. Two pipes at the bottom of the right end tank of the condenser provide connections for the receiver drier.

RECEIVER DRIER

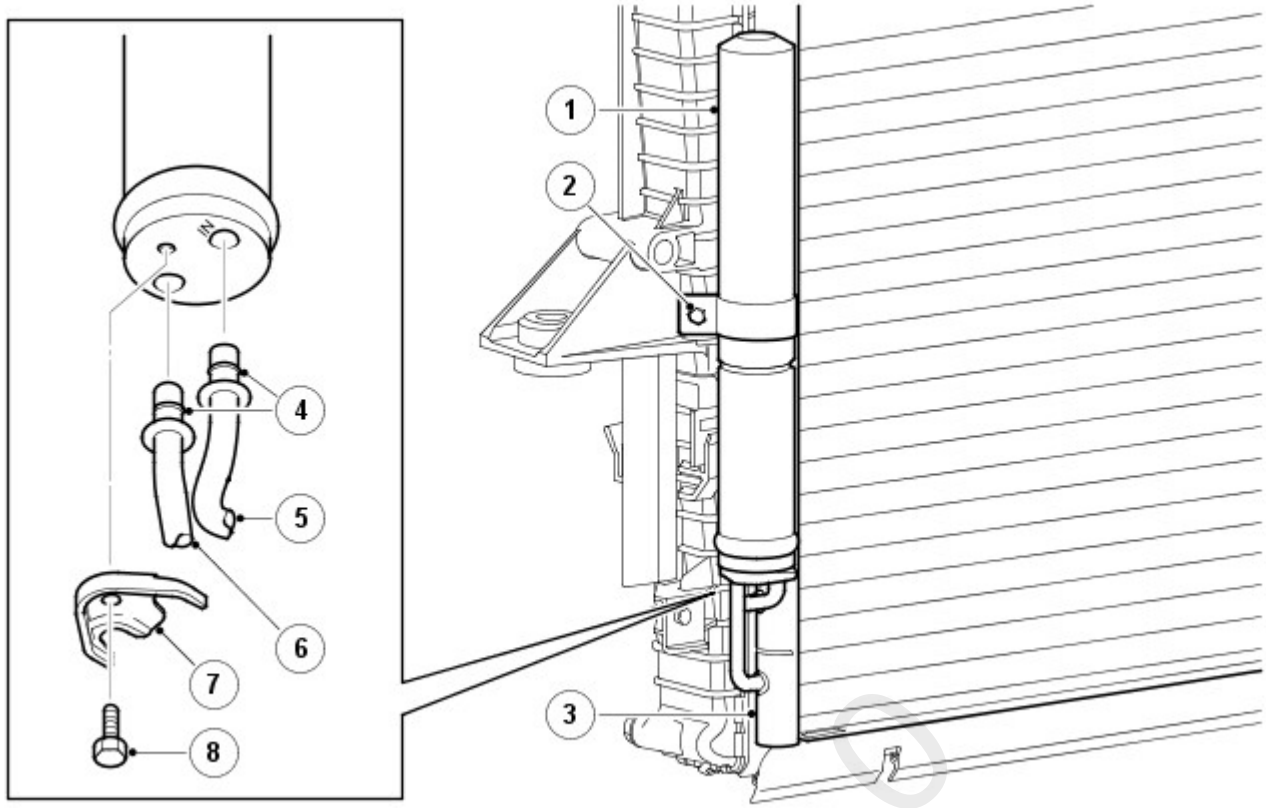

E46921

Item	Part Number	Description
1	-	Receiver drier
2	-	Clamp
3	-	Condenser RH end tank
4	-	O-ring seals
5	-	Inlet pipe
6	-	Outlet pipe
7	-	Collar
8	-	Bolt

The receiver drier removes solid impurities and moisture from the refrigerant, and provides a reservoir for liquid refrigerant to accommodate changes of heat load at the evaporator.

The receiver drier is attached to the two stub pipes on the right end tank of the condenser. A collar, located on lands on the stub pipes and secured with a bolt, attaches the stub pipes to the receiver drier. A clamp secures the body of the receiver drier to a bracket welded to the right end tank of the condenser. The inlet and outlet ports of the receiver drier are the same size, so care must be taken to install the receiver drier the correct way round on the stub pipes; to assist with installation, the inlet port is identified with the word IN etched into the receiver drier.

Refrigerant entering the receiver drier passes through a filter and a desiccant pack, then collects in the base of the unit before flowing through the outlet stub pipe back to the condenser. The desiccant and the filter are non-serviceable; the complete unit must be replaced when a change of desiccant is required.

THERMOSTATIC EXPANSION VALVE

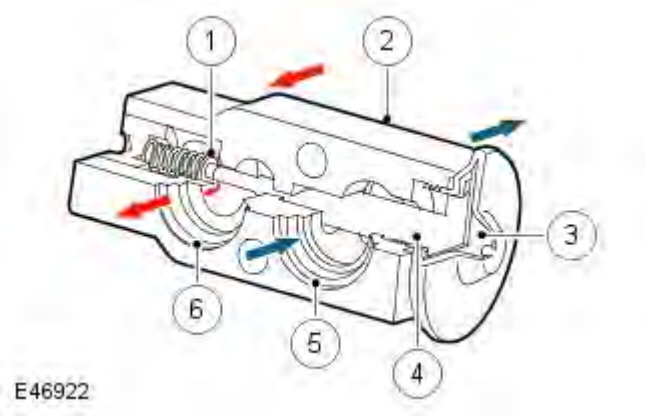

E46922

Item	Part Number	Description
1	-	Metering valve
2	-	Housing

3	-	Diaphragm
4	-	Temperature sensitive tube
5	-	Outlet passage from evaporator
6	-	Inlet passage to evaporator

The thermostatic expansion valve meters the flow of refrigerant into the evaporator, to match the refrigerant flow with the heat load of the air passing through the evaporator.

The thermostatic expansion valve is a block type valve located behind the heater assembly, and attached to the inlet and outlet ports of the evaporator. The thermostatic expansion valve consists of an aluminum housing containing inlet and outlet passages. A ball and spring metering valve is installed in the inlet passage and a temperature sensor is installed in the outlet passage. The temperature sensor consists of a temperature sensitive tube connected to a diaphragm. The bottom end of the temperature sensitive tube acts on the ball of the metering valve. Pressure on top of the diaphragm is controlled by evaporator outlet temperature conducted through the temperature sensitive tube. The bottom of the diaphragm senses evaporator outlet pressure.

Liquid refrigerant flows through the metering valve into the evaporator. The restriction across the metering valve reduces the pressure and temperature of the refrigerant. The restriction also changes the liquid stream of refrigerant into a fine spray, to improve the evaporation process. As the refrigerant passes through the evaporator, it absorbs heat from the air flowing through the evaporator. The increase in temperature causes the refrigerant to vaporize and increase in pressure.

The temperature and pressure of the refrigerant leaving the evaporator act on the diaphragm and temperature sensitive tube, which regulate the metering valve opening and so control the volume of refrigerant flowing through the evaporator. The warmer the air flowing through the evaporator, the more heat available to evaporate refrigerant and thus the greater the volume of refrigerant allowed through the metering valve.

EVAPORATOR

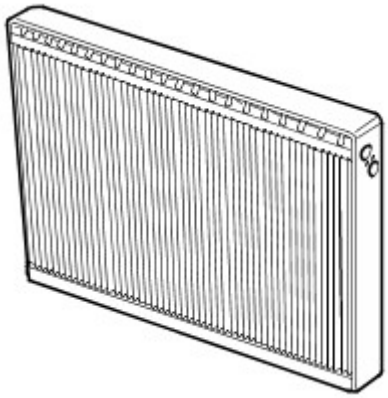

E46923

The evaporator is installed in the heater assembly between the blower and the heater matrix, to absorb heat from the exterior or recirculated air. Low pressure, low temperature refrigerant changes from liquid to vapor in the evaporator, absorbing large quantities of heat as it changes state.

Most of the moisture in the air passing through the evaporator condenses into water, which drains out of the heater and through the floorpan, to the underside of the vehicle, through two drain tubes.

REFRIGERANT LINES

To maintain similar flow velocities around the system, the diameter of the refrigerant lines varies to suit the two pressure/temperature regimes. The larger diameters are installed in the low pressure/temperature regime and the smaller diameters are installed in the high pressure/temperature regime.

Low and high pressure charging connections are incorporated into the refrigerant lines for system servicing. Where auxiliary A/C is installed, connections for the auxiliary refrigerant lines are incorporated near the engine bulkhead.

Under normal operating conditions, the smaller diameter pipes (A/C compressor discharge, liquid refrigerant) are hot to the touch and the larger diameter pipes (A/C compressor suction, gaseous refrigerant) are cold to the touch.

SYSTEM OPERATION

To accomplish the transfer of heat, the refrigerant is circulated around the system, where it passes through two pressure/temperature regimes. In each of the pressure/temperature regimes, the refrigerant changes state, during which process maximum heat absorption or release occurs. The low pressure/temperature regime is from the thermostatic expansion valve, through the evaporator to the compressor; the refrigerant decreases in pressure and temperature at the thermostatic expansion valve, then changes state from liquid to vapor in the evaporator, to absorb heat. The high pressure/temperature regime is from the compressor, through the condenser and receiver drier to the thermostatic expansion valve; the refrigerant increases in pressure and temperature as it passes through the compressor, then releases heat and changes state from vapor to liquid in the condenser.

A/C SYSTEM SCHEMATIC

- NOTE: A = Refrigerant liquid; B = Refrigerant vapor; C = Air flow

mcx30.com

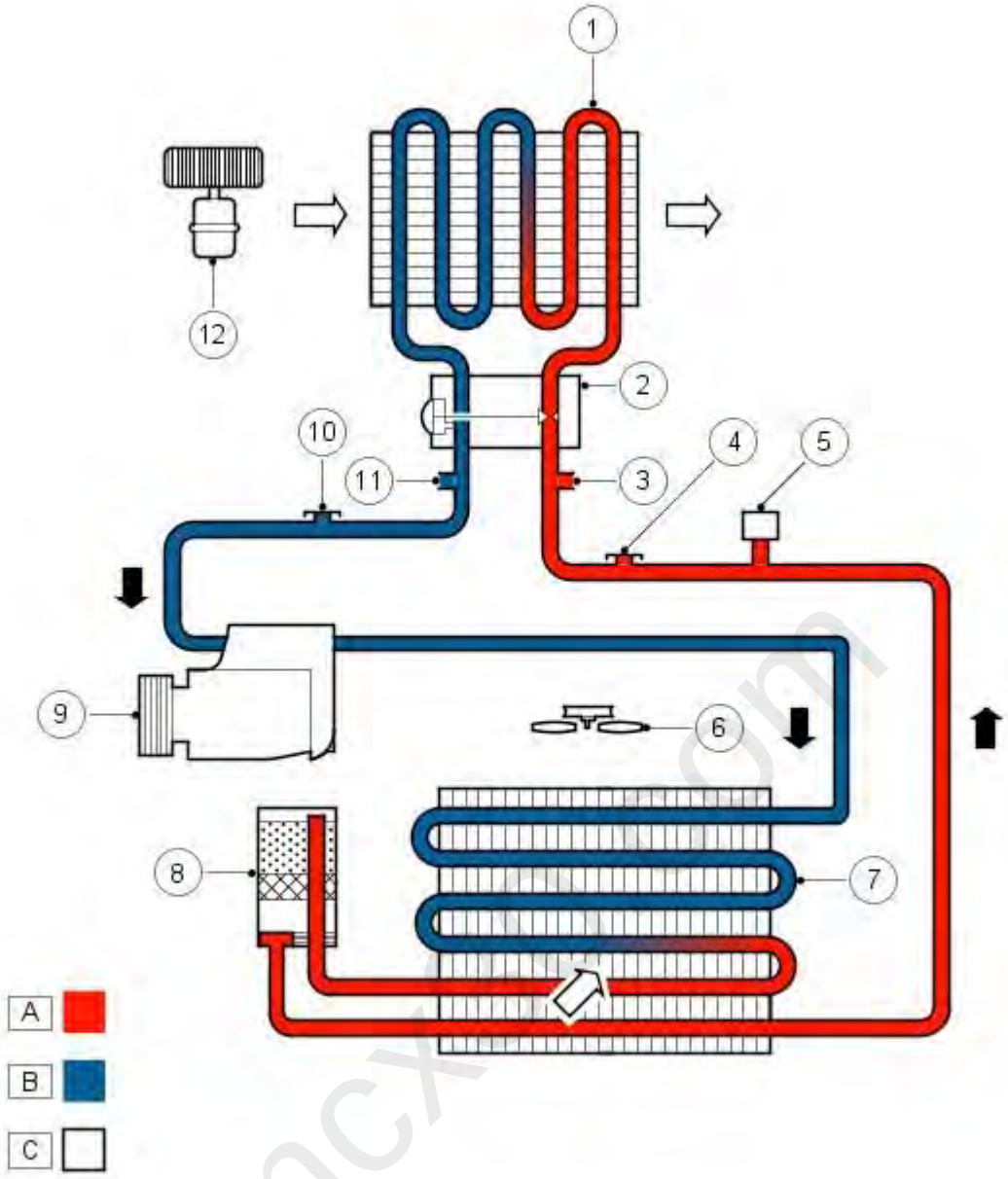

E46924

Item	Part Number	Description
1	-	Evaporator
2	-	Thermostatic expansion valve
3	-	High pressure connection with auxiliary climate control (where fitted)
4	-	High pressure servicing connection
5	-	Refrigerant pressure sensor
6	-	Cooling fan
7	-	Condenser
8	-	Receiver drier
9	-	A/C compressor
10	-	Low pressure servicing connection
11	-	Low pressure connection with auxiliary climate control (where fitted)
12	-	Blower

Published: 11-May-2011

Air Conditioning - V8 5.0L Petrol - Air Conditioning

Diagnosis and Testing

For additional information.
REFER to: Climate Control System (412-00 Climate Control System - General Information, Diagnosis and Testing).

mcx30.com

Published: 11-May-2011

Air Conditioning - V8 5.0L Petrol - Air Conditioning (A/C) Compressor

Removal and Installation

Removal

- NOTE: Removal steps in this procedure may contain installation details.

1. **1.** WARNING: Make sure to support the vehicle with axle stands.

   Raise and support the vehicle.

2. Refer to: Cooling System Draining, Filling and Bleeding (303-03D Engine Cooling - V8 5.0L Petrol, General Procedures).

3. Refer to: Air Conditioning (A/C) System Recovery, Evacuation and Charging (412-00 Climate Control System - General Information, General Procedures).

4. Refer to: Accessory Drive Belt (303-05D Accessory Drive - V8 5.0L Petrol, Removal and Installation).

5. Remove the LH front road wheel.

   Torque: 140 Nm

6.

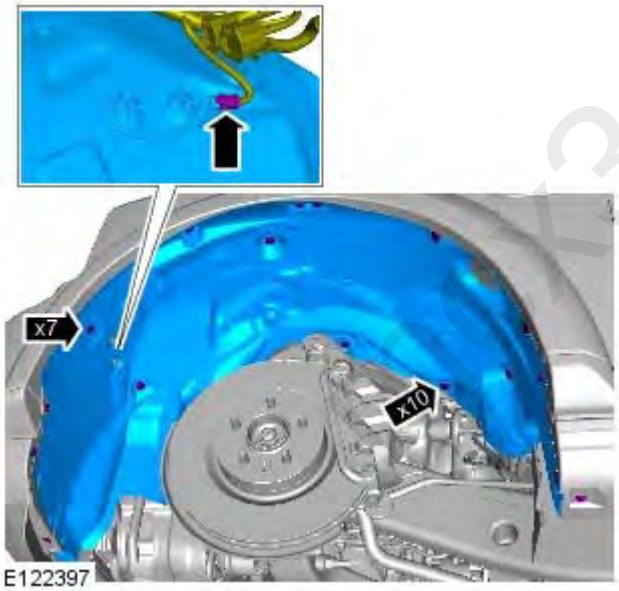

fix30.com

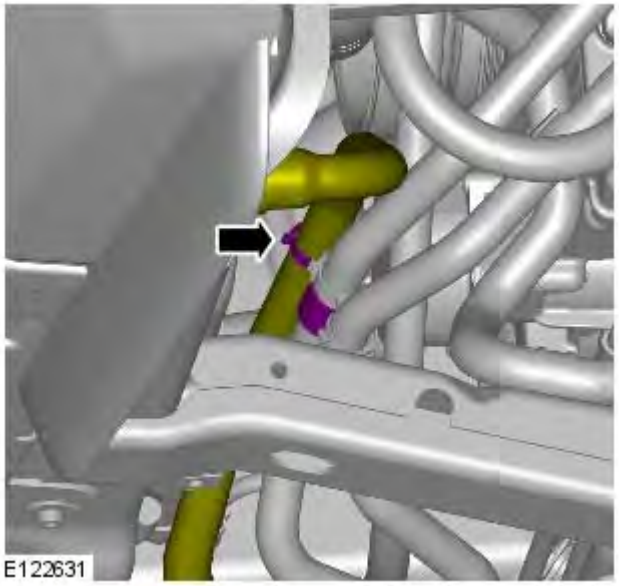

7. **7.** CAUTION: Be prepared to collect escaping coolant.

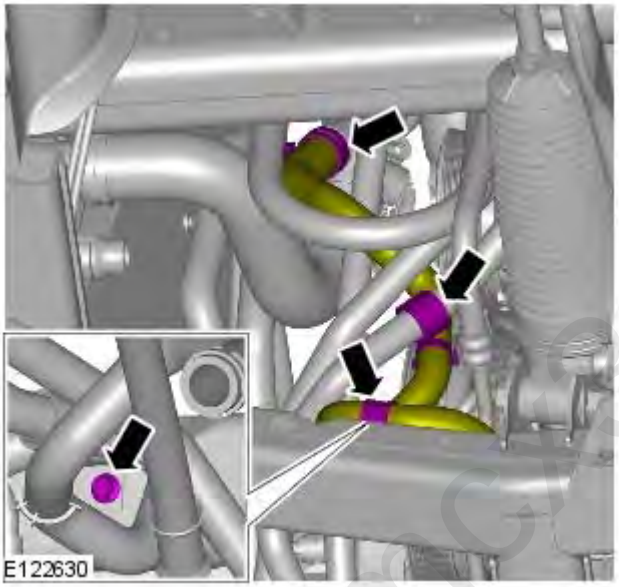

8. **8.** CAUTION: Be prepared to collect escaping coolant.

   Torque: 10 Nm

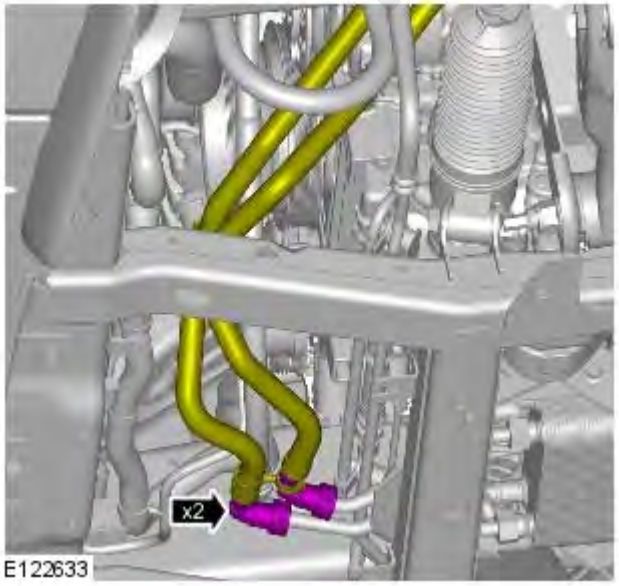

9. **9.** CAUTION: Make sure that all openings are sealed. Use new blanking caps.

mg350.com

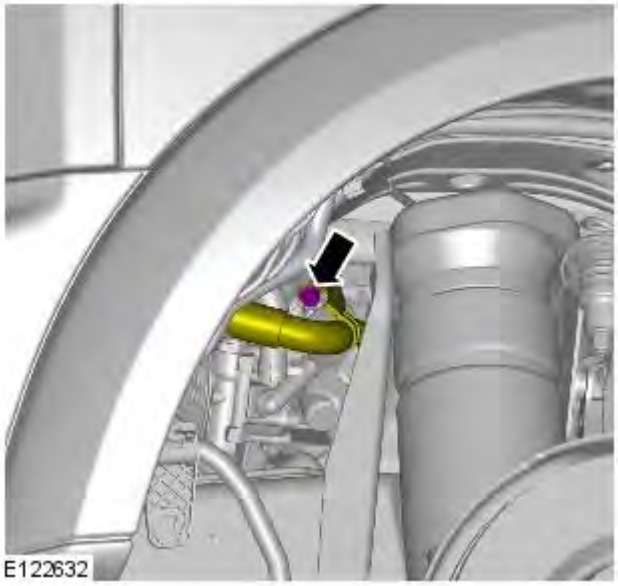

10. *Torque:* 18 Nm

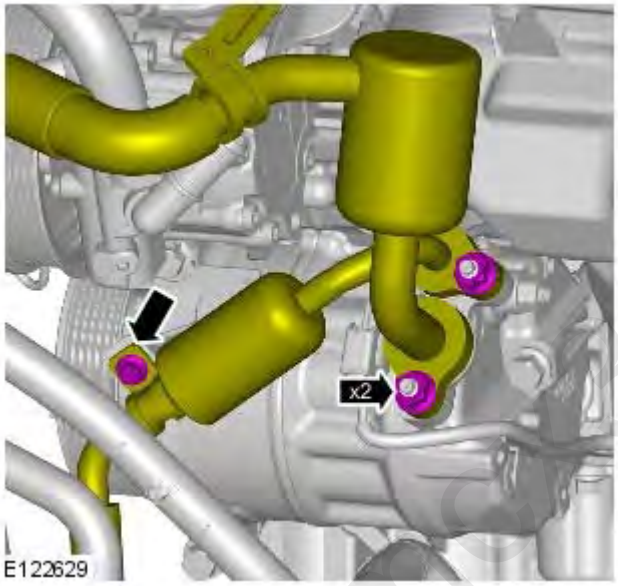

11. **11.** CAUTIONS:

⚠ Make sure that all openings are sealed. Use new blanking caps.

⚠ A new O-ring seal is to be installed.

Torque:
M8 18 Nm
M6 6 Nm

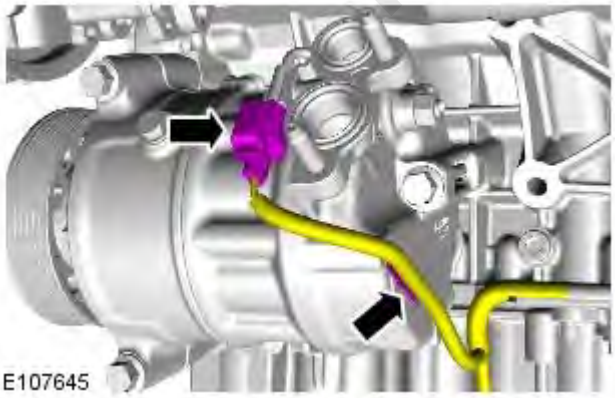

12.

mg80.com

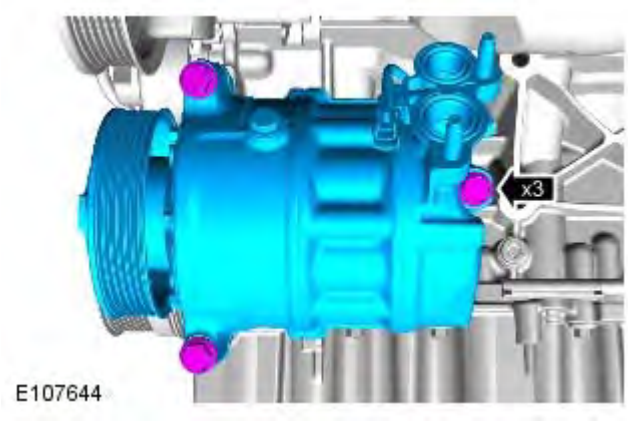

13. *Torque:* 25 Nm

Installation

1. To install, reverse the removal procedure.

mcx30.com

Published: 11-May-2011

Air Conditioning - V8 5.0L Petrol - Condenser Core

Removal and Installation

Removal

1. Disconnect the battery ground cable.

   Refer to: Specifications (414-00 Battery and Charging System - General Information, Specifications).

2. **2.** WARNING: Make sure to support the vehicle with axle stands.

   Raise and support the vehicle.

3. Refer to: Air Conditioning (A/C) System Recovery, Evacuation and Charging (412-00 Climate Control System - General Information, General Procedures).

4. Refer to: Cooling System Draining, Filling and Bleeding (303-03D Engine Cooling - V8 5.0L Petrol, General Procedures).

5. Refer to: Radiator Grille (501-08 Exterior Trim and Ornamentation, Removal and Installation).

6. Refer to: Cooling Fan (303-03D Engine Cooling - V8 5.0L Petrol, Removal and Installation).

7.

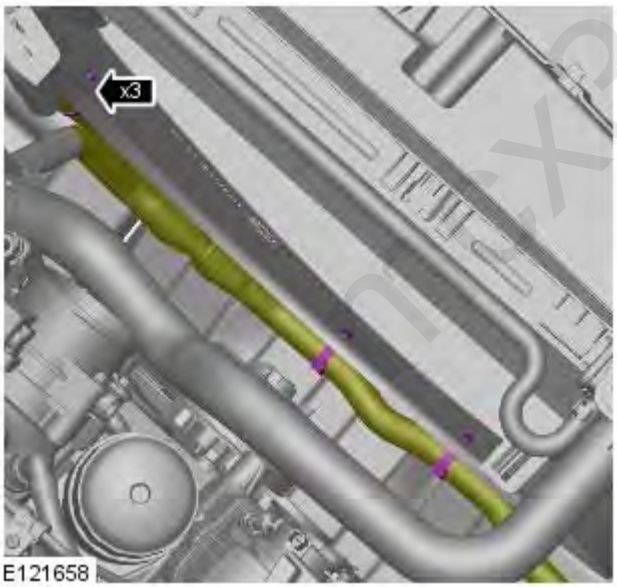

E121658

mex30.com

8.

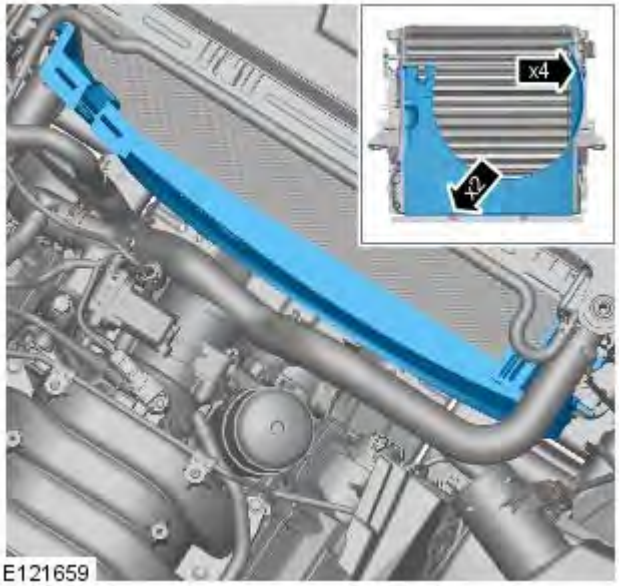

9.

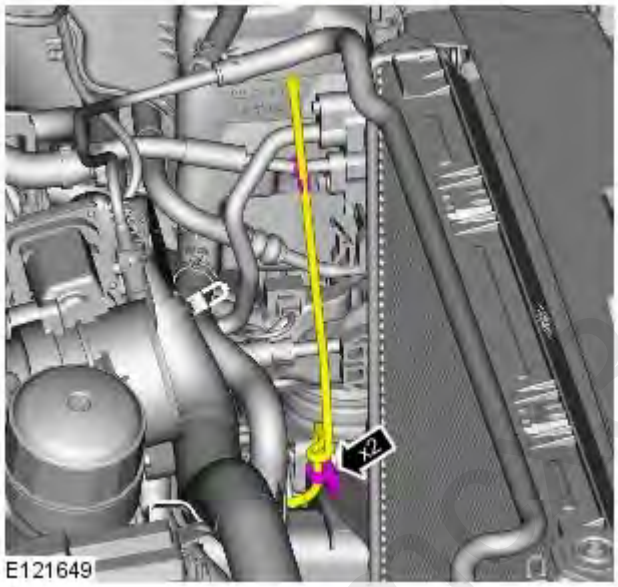

10.

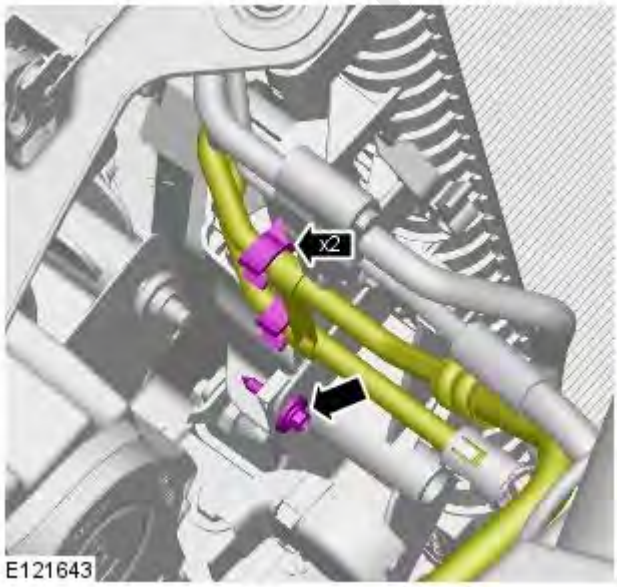

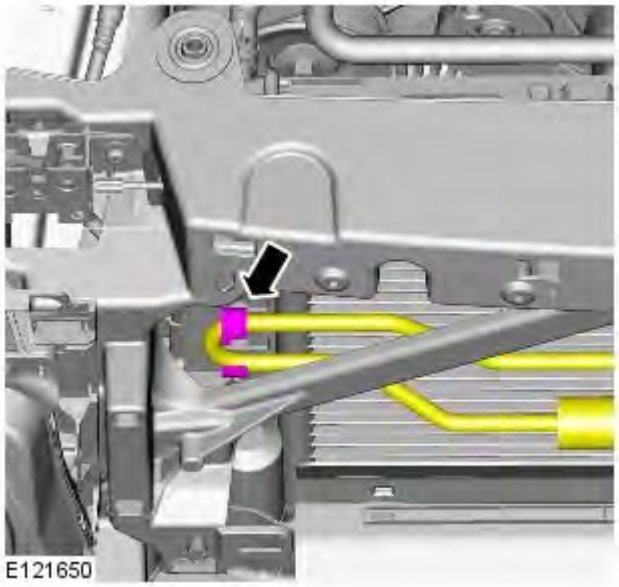

11. **11.** CAUTION: Always plug any open connections to prevent contamination.

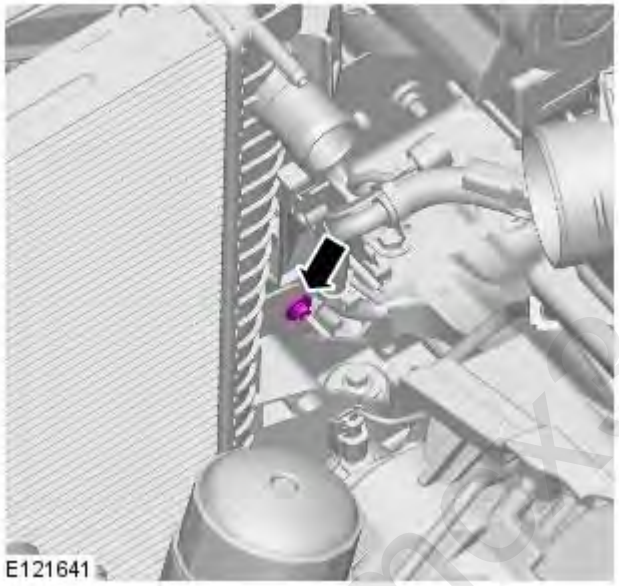

12.

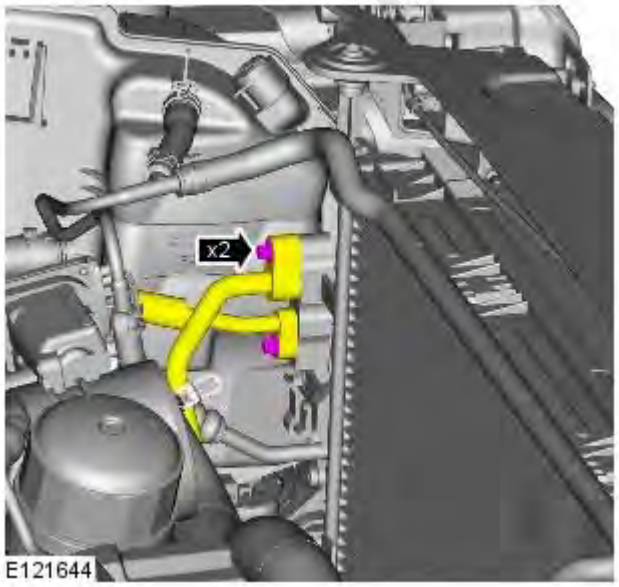

13. **13.** CAUTION: Before disconnecting or removing the components, make sure the area around the joint faces and connections are clean. Plug open connections to prevent contamination.

Torque: 10 Nm

mx30.com

14.

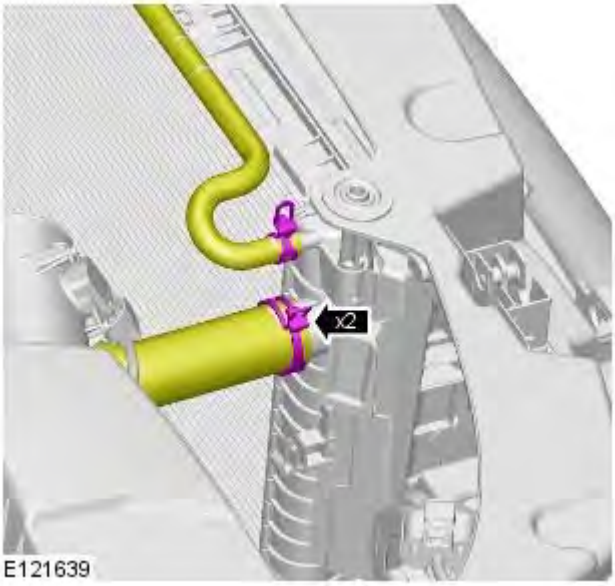

E121639

15.

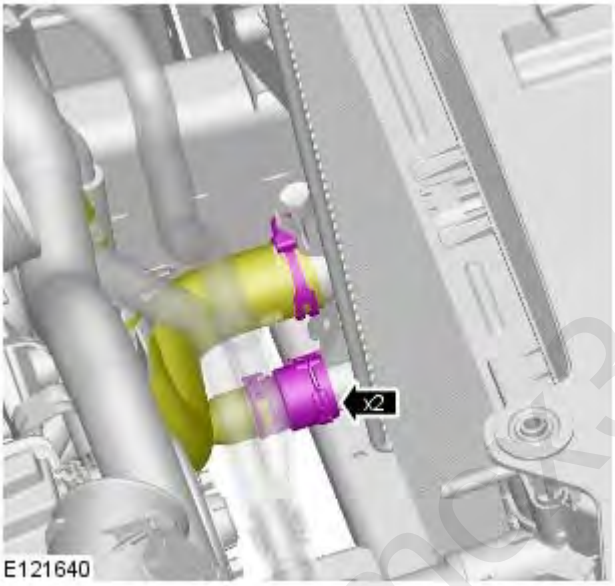

E121640

16.

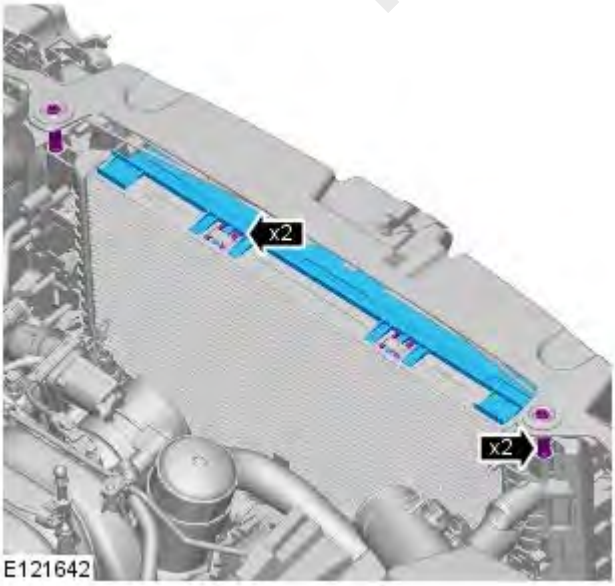

E121642

mc430.com

17. **17.** CAUTION: Always protect the cooling pack elements to prevent accidental damage.

Torque: 25 Nm

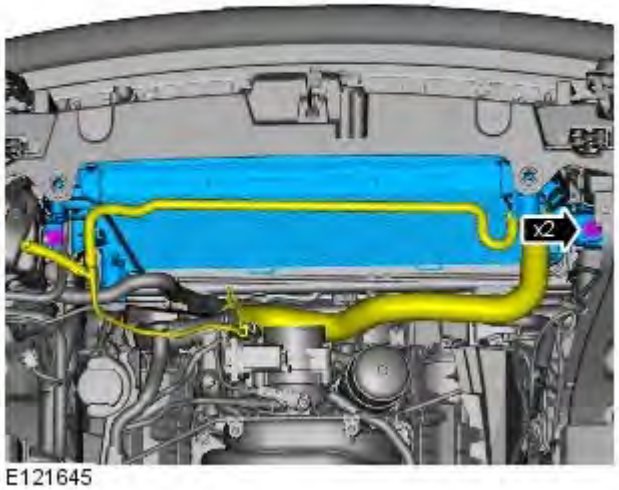

E121645

18. *Torque:* 10 Nm

E121637

19. *Torque:* 10 Nm

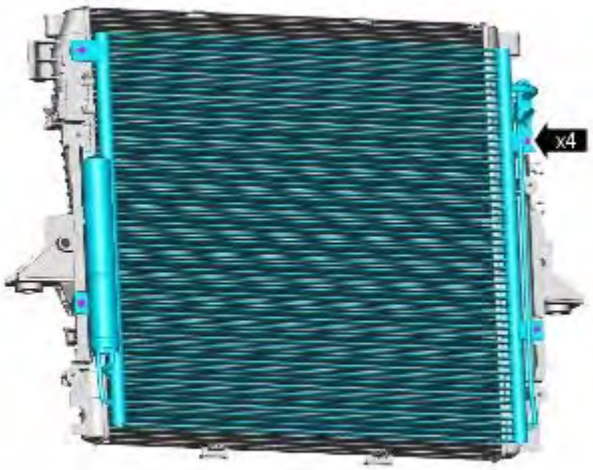

E121636

Installation

1. To install, reverse the removal procedure.

mcx30.com

Published: 11-May-2011

Air Conditioning - V8 5.0L Petrol - Condenser Fan

Removal and Installation

Removal

- NOTE: Removal steps in this procedure may contain installation details.

1. Disconnect the battery ground cable.

   Refer to: Specifications (414-00, Specifications).

2. **2.** WARNING: Make sure to support the vehicle with axle stands.

   Raise and support the vehicle.

3. Refer to: Hood Latch Panel (501-02, Removal and Installation).

4.

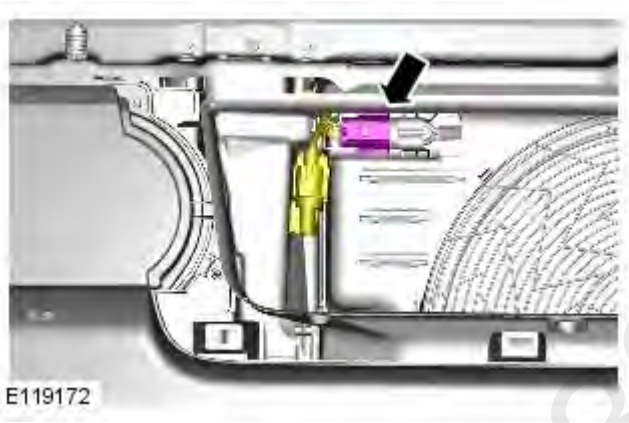

5.

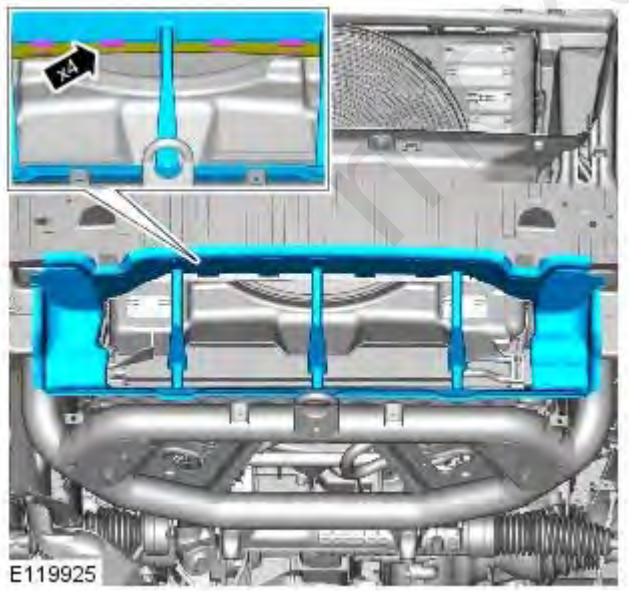

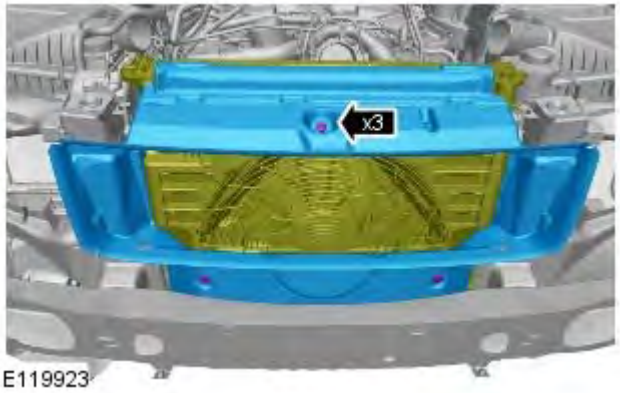

6.

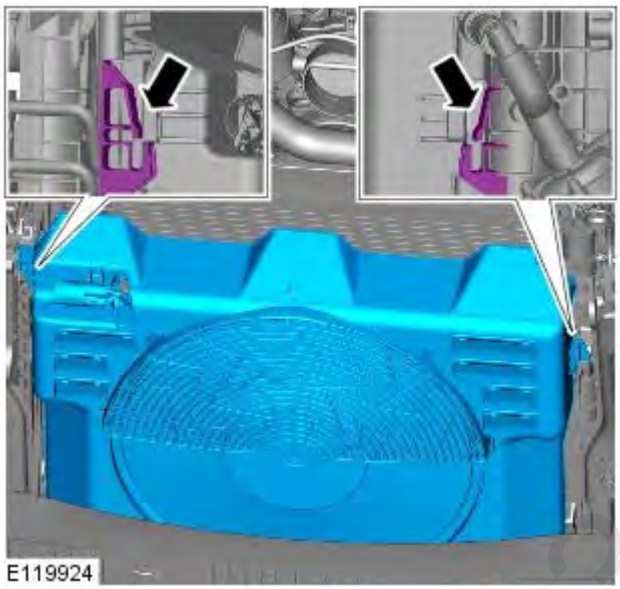

7.

Installation

1. To install reverse the removal procedure.

mcx30.com

Published: 11-May-2011

Air Conditioning - V8 5.0L Petrol - Evaporator Core

Removal and Installation

Removal

1. Remove the engine cover.
   For additional information, refer to: Engine Cover - V8 5.0L Petrol (501-05 Interior Trim and Ornamentation, Removal and Installation).
2. Evacuate the A/C system.
   For additional information, refer to: Air Conditioning (A/C) System Recovery, Evacuation and Charging (412-00 Climate Control System - General Information, General Procedures).
3. WARNING: Do not work on or under a vehicle supported only by a jack. Always support the vehicle on safety stands.

   Raise and support the vehicle.
4. Drain the cooling system.
   For additional information, refer to: Cooling System Draining, Filling and Bleeding (303-03D Engine Cooling - V8 5.0L Petrol, General Procedures).
5. Remove the driver side front seat.
   For additional information, refer to: Front Seat (501-10 Seating, Removal and Installation).
6. Remove the floor console.
   For additional information, refer to: Floor Console (501-12 Instrument Panel and Console, Removal and Installation).
7. Remove the instrument panel upper section.
   For additional information, refer to: Instrument Panel Upper Section (501-12 Instrument Panel and Console, Removal and Installation).
8. Release the 3 ground cables from the driver side lower A-pillar.
   - Remove the 2 nuts.

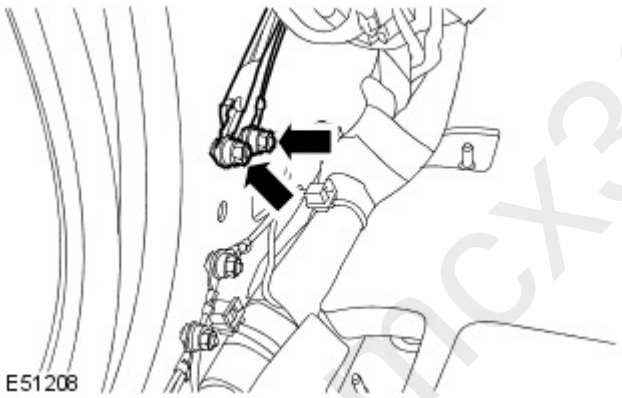

9. Disconnect the 5 electrical connectors from the driver side lower A-pillar.

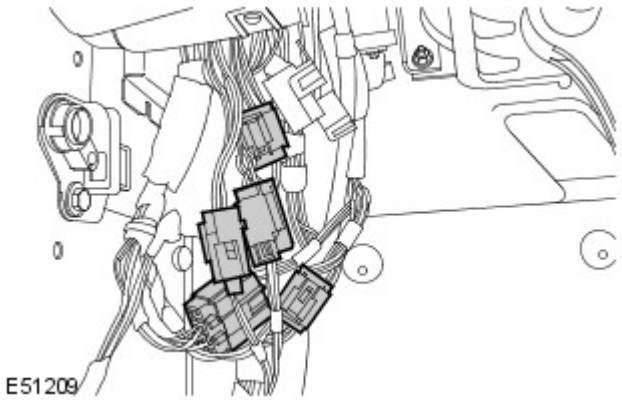

mcx30.com

10. Disconnect the 3 electrical connectors.

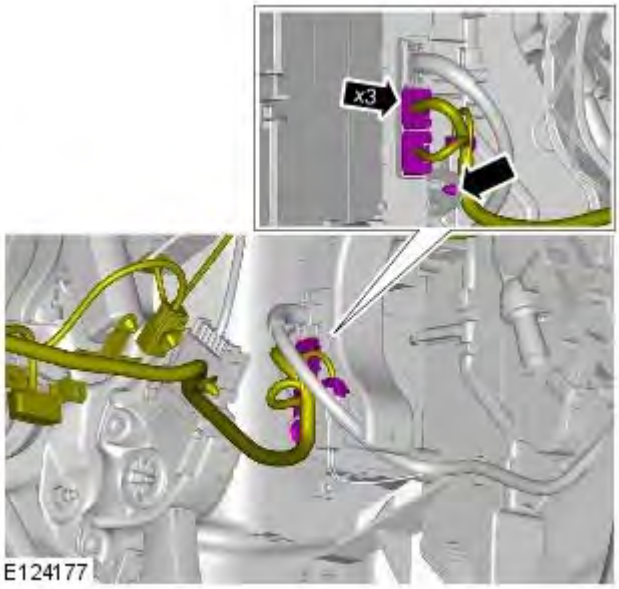

11. Release the 3 ground cables from the passenger side lower A-pillar.

- Remove the 2 nuts.

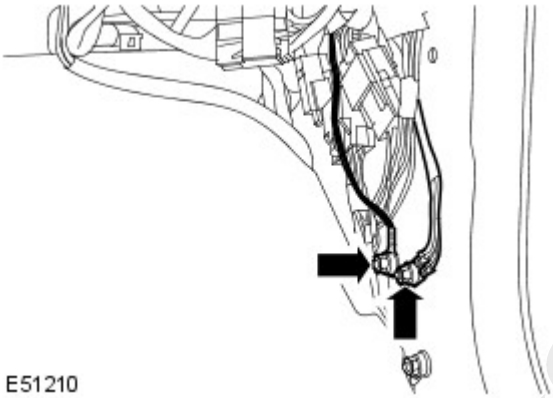

12. Disconnect the 5 electrical connectors from the passenger side lower A-pillar.

13. Disconnect the central junction box (CJB) three electrical connectors.

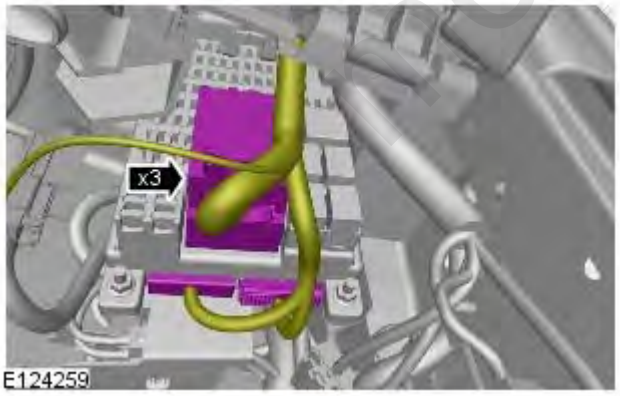

14. Disconnect 2 electrical connectors from the instrument panel center reinforcement.

mcx30.com

15. CAUTION: Cover fiber optic cable connectors to minimize dust ingress and avoid bending the cables in a radius of less than 30 mm.

If installed, disconnect the instrument panel center reinforcement fibre optic cables.

- Disconnect the electrical connector.

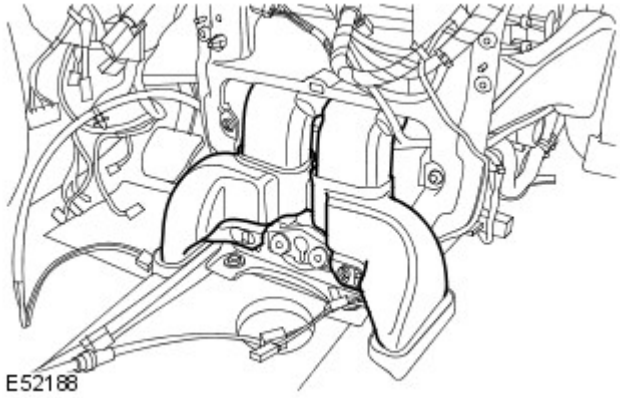

16. Remove the heater housing center ducts.

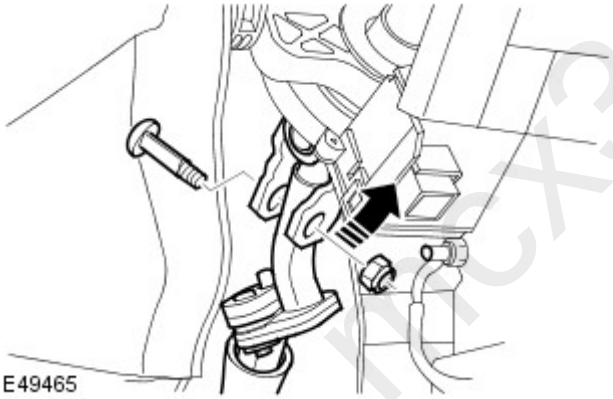

17. Disconnect the steering column intermediate shaft from the steering column.

- Note the fitted position.
- Remove the special bolt and discard the nut.

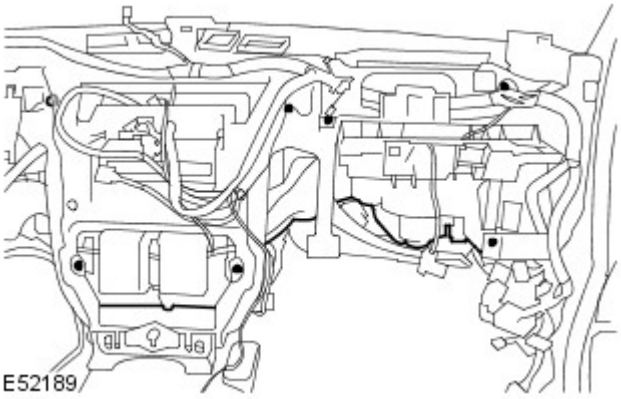

18. Release the heater housing from the instrument panel carrier.

- Remove the 7 Torx screws.

19. Remove the plenum chamber panel.
For additional information, refer to: Plenum Chamber (412-01 Air Distribution and Filtering, Removal and Installation).

mcx30.com

20. Remove the instrument panel carrier to bulkhead Torx bolt.

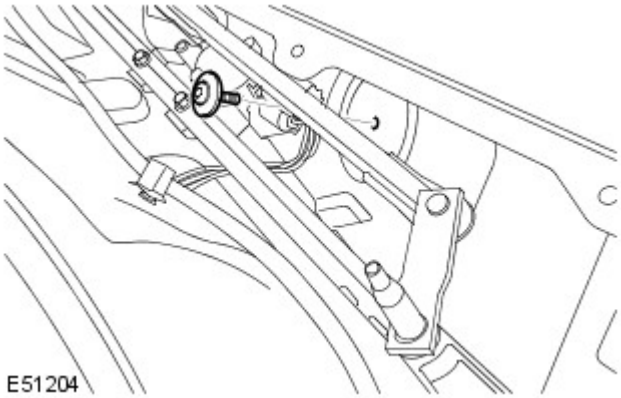
E51204

21. With assistance, remove the instrument panel.

- Remove the 6 Torx bolts.

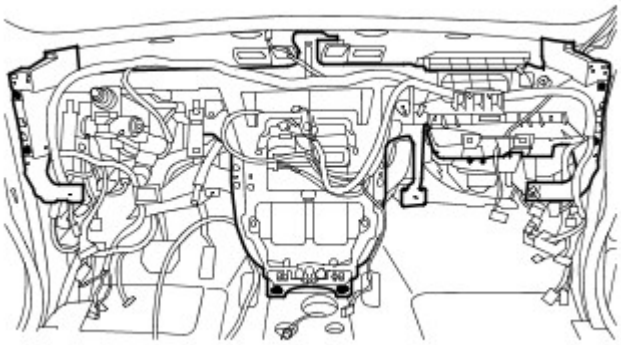
E52190

22. CAUTION: Before disconnecting or removing the components, make sure the area around the joint faces and connections are clean. Plug open connections to prevent contamination.

Disconnect 2 heater hoses from the bulkhead.

- Release the 2 clips.

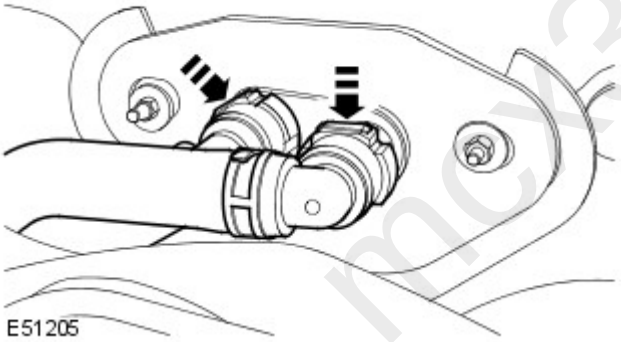
E51205

23. CAUTION: Immediately cap all refrigerant lines to prevent ingress of dirt and moisture.

Release the 2 A/C refrigerant lines.

- Remove the nut and bolt.
- Remove and discard the O-ring seals.

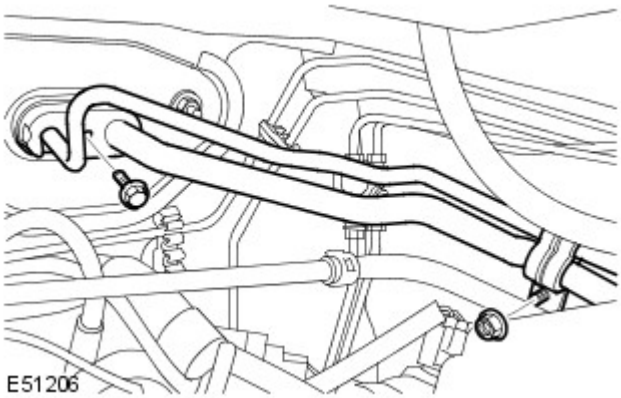
E51206

mcy3.com

24. Remove the 2 adapter panels.

- Remove the 4 nuts.

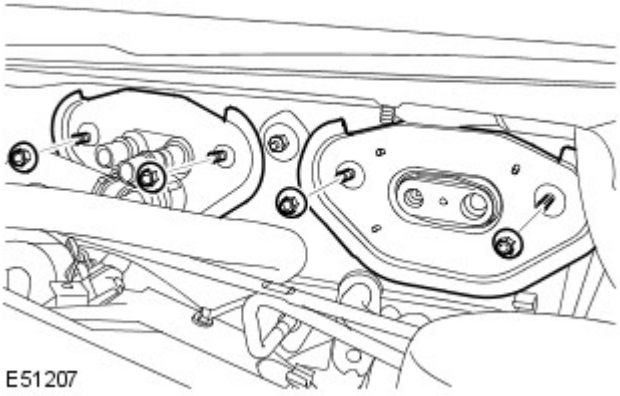

25. Disconnect 2 drain tubes from the heater housing.

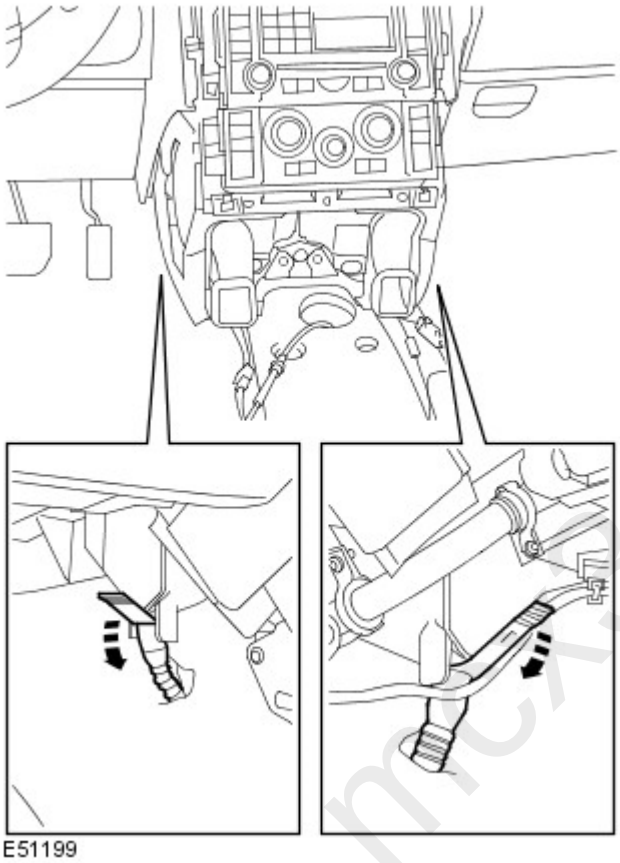

26. Remove the driver side footwell duct.

- Remove the 2 Torx screws.

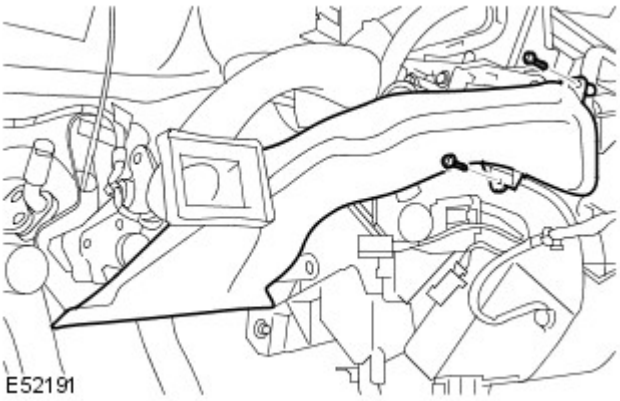

mcx30.com

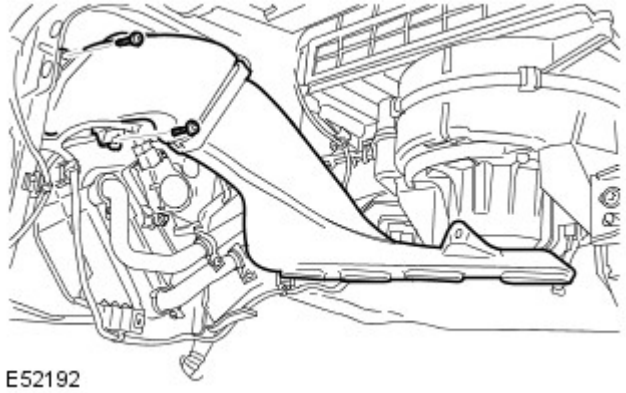

27. Remove the passenger side footwell duct.

- Remove the 2 Torx screws.

28. Driver side: Remove the heater housing to bulkhead Torx bolt.

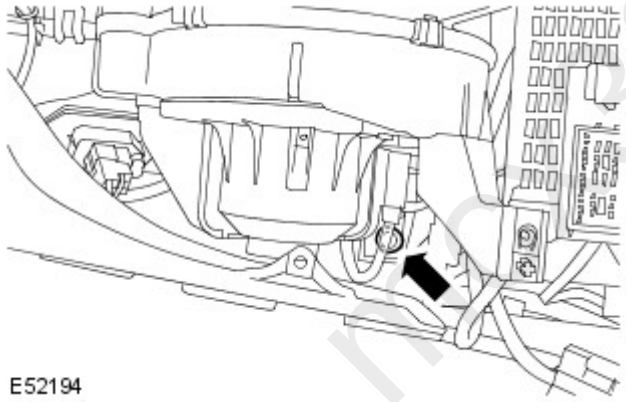

29. Passenger side: Remove the heater housing to bulkhead Torx bolt.

- With assistance, remove the heater and evaporator core housing.

m30.com

30. Remove the A/C control module.

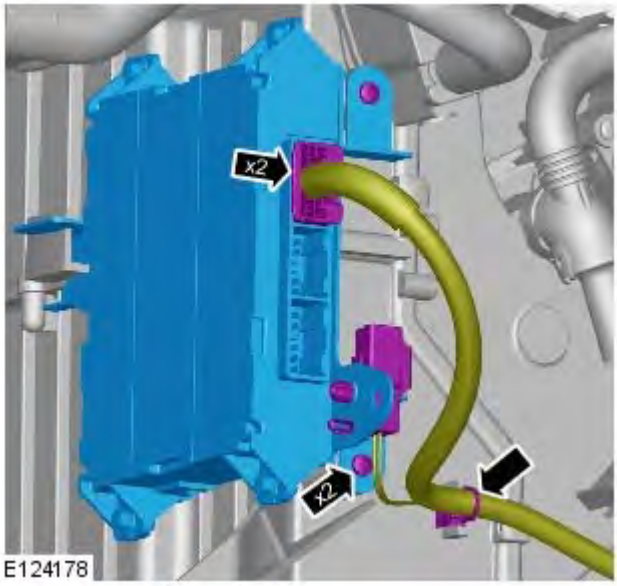

E124178

31. Disconnect the evaporator core temperature sensor electrical connector.

E124179

32. Disconnect the electrical connector.

E124170

mixgo.com

33. Detach the wiring harness.

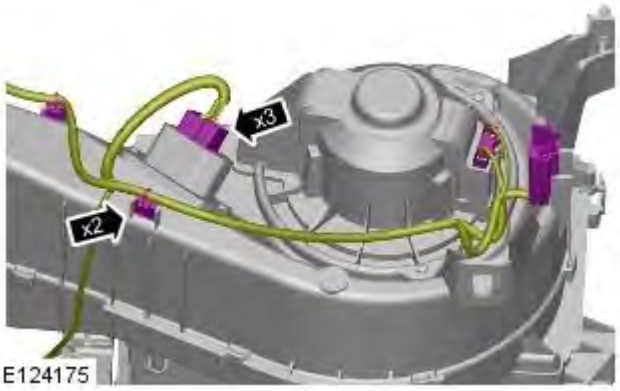

34. Remove the bolt from the support bracket.

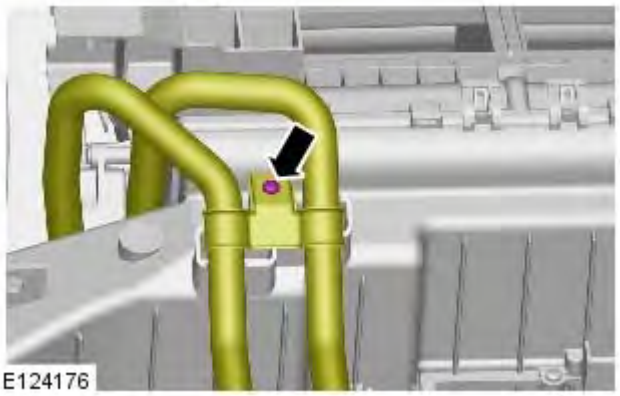

35. Remove the heater and evaporator core housing.

- Remove the 8 clips.
- Carefully release the 2 clips.

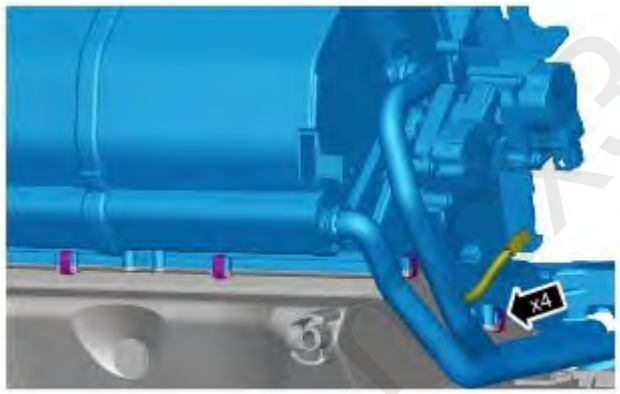

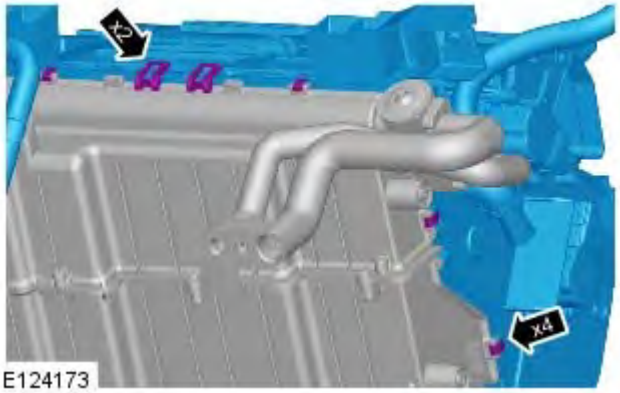

36. Remove the thermostatic expansion valve.

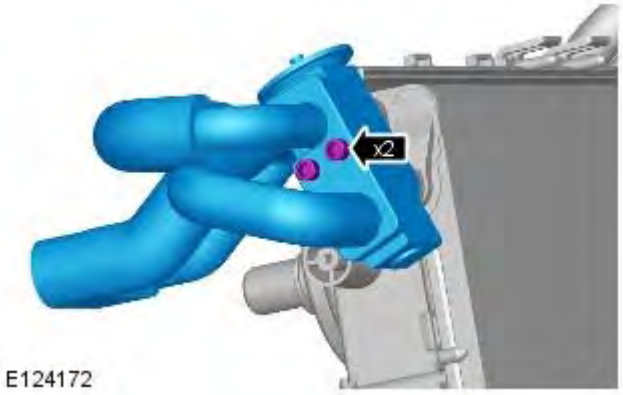

37. Remove the evaporator core.

- Release the temperature sensor.

Installation

1. Install the evaporator core.

- Secure the temperature sensor.

2. Secure the heater core housing.

- Install the clips.

3. Install the thermostatic expansion valve.

- Tighten the bolts to 3.5 Nm (2.5 lb.ft).

4. Install the wiring harness.

5. Install and tighten the bolt.

6. Connect the temperature sensor electrical connector.

7. Install the CC module.

- Tighten the bolts.

8. Passenger side: Install the heater housing to bulkhead Torx bolt and tighten to 6 Nm (4 lb.ft).

- With assistance, install the heater and evaporator core housing.

9. Driver side: Install the heater housing to bulkhead Torx bolt and tighten to 6 Nm (4 lb.ft).

10. Install the footwell ducts.

- Tighten the Torx screws.

11. Connect the drain tubes to the heater housing.

12. Install the adapter panels.

- Tighten the nuts to 6 Nm (4 lb.ft).

13. Secure the A/C refrigerant lines.

mcx30.com

- Clean the components.
- Install new O-ring seals.
- Tighten the bolt to 5 Nm (4 lb.ft).
- Tighten the nut to 6 Nm.

14. Connect the bulkhead heater hoses.

15. With assistance, install the instrument panel.

- Tighten the Torx bolts to 25 Nm (18 lb.ft).

16. Install the instrument panel carrier to bulkhead Torx bolt and tighten to 25 Nm (18 lb.ft).

17. Install the plenum chamber panel.
For additional information, refer to: Plenum Chamber (412-01 Air Distribution and Filtering, Removal and Installation).

18. Secure the heater housing.

- Tighten the screws.

19. Connect the steering column intermediate shaft.

- Install the special bolt and tighten the new nut to 22 Nm (16 lb.ft).

20. Install the heater housing center ducts.

21. Connect the instrument panel center reinforcement fibre optic cables.

22. Connect the instrument panel center reinforcement electrical connectors.

23. Connect the CJB electrical connectors.

24. Connect the electrical connectors to the passenger side lower A-pillar.

25. Connect the ground cables to the passenger side lower A-pillar.

- Tighten the nuts to 10 Nm (7 lb.ft).

26. Connect the electrical connectors to the driver side lower A-pillar.

27. Connect the ground cables to the driver side lower A-pillar.

- Tighten the nuts to 10 Nm (7 lb.ft).

28. Connect the 3 electrical connectors.

29. Install the instrument panel upper section.
For additional information, refer to: Instrument Panel Upper Section (501-12 Instrument Panel and Console, Removal and Installation).

30. Install the floor console.
For additional information, refer to: Floor Console (501-12 Instrument Panel and Console, Removal and Installation).

31. Install the front seat.
For additional information, refer to: Front Seat (501-10 Seating, Removal and Installation).

32. Recharge the A/C system.
For additional information, refer to: Air Conditioning (A/C) System Recovery, Evacuation and Charging (412-00 Climate Control System - General Information, General Procedures).

33. Refill the cooling system.
For additional information, refer to: Cooling System Draining, Filling and Bleeding (303-03D Engine Cooling - V8 5.0L Petrol, General Procedures).

34. Install the engine cover.
For additional information, refer to: Engine Cover - V8 5.0L Petrol (501-05 Interior Trim and Ornamentation, Removal and Installation).

mcx30.com

Published: 11-May-2011

Air Conditioning - V8 5.0L Petrol - Thermostatic Expansion Valve

Removal and Installation

Removal

1. Evacuate the A/C system.
   For additional information, refer to: Air Conditioning (A/C) System Recovery, Evacuation and Charging (412-00 Climate Control System - General Information, General Procedures).
2. Remove the instrument panel upper section.
   For additional information, refer to: Instrument Panel Upper Section (501-12 Instrument Panel and Console, Removal and Installation).
3. CAUTION: Immediately cap all refrigerant lines to prevent ingress of dirt and moisture.

   Remove the thermostatic expansion valve.
   - Remove the cover.
   - Remove the 2 Allen bolts.
   - Remove and discard the 4 O-ring seals.

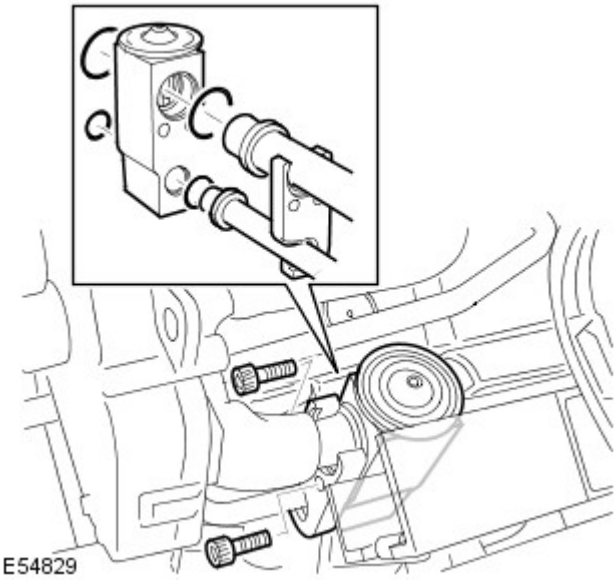

Installation

1. Install the thermostatic expansion valve.
   - Clean the components.
   - Install the new O-ring seals.
   - Tighten the Allen bolts to 5 Nm (4 lb.ft).
   - Install the cover.
2. Install the instrument panel upper section.
   For additional information, refer to: Instrument Panel Upper Section (501-12 Instrument Panel and Console, Removal and Installation).
3. Recharge the A/C system.
   For additional information, refer to: Air Conditioning (A/C) System Recovery, Evacuation and Charging (412-00 Climate Control System - General Information, General Procedures).

mcx30.com

Published: 11-May-2011

Air Conditioning - V8 5.0L Petrol - Air Conditioning (A/C) Pressure Transducer

Removal and Installation

Removal

1. Disconnect the battery ground cable.
   For additional information, refer to: Specifications (414-00 Battery and Charging System - General Information, Specifications).
2. Recover the A/C refrigerant.
   For additional information, refer to: Air Conditioning (A/C) System Recovery, Evacuation and Charging (412-00 Climate Control System - General Information, General Procedures).
3. CAUTIONS:

   Before disconnecting or removing the components, ensure the area around the joint faces and connections are clean. Plug open connections to prevent contamination.

   To prevent damage to components, use an additional wrench when loosening or tightening unions.

   Remove the A/C pressure transducer.
   - Disconnect the electrical connector.
   - Remove and discard the seal.

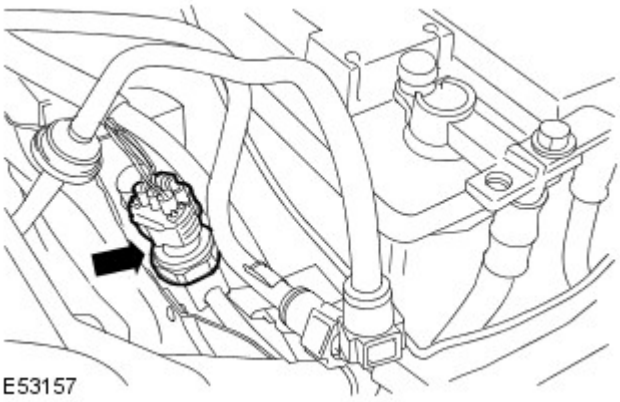

Installation

1. Install the A/C pressure transducer.
   - Clean the component mating faces.
   - Install a new seal.
   - Tighten the transducer to 10 Nm (7 lb.ft).
   - Connect the electrical connector.
2. Recharge the A/C system.
   For additional information, refer to: Air Conditioning (A/C) System Recovery, Evacuation and Charging (412-00 Climate Control System - General Information, General Procedures).
3. Connect the battery ground cable.
   For additional information, refer to: Specifications (414-00 Battery and Charging System - General Information, Specifications).

mcx30.com